PIONEER®
The Art of Entertainment

Service Manual

DEH-P645/UC

ORDER NO.
CRT2147

MULTI-CD CONTROL HIGH POWER CD PLAYER WITH ID-LOGIC TUNER

DEH-P645 UC
DEH-P56 UC
DEH-P545 UC
DEH-46 UC
DEH-445 UC
DEH-41 UC

COMPACT disc DIGITAL AUDIO

- **See the separate manual CX-597(CRT1829) for the CD mechanism description, disassembly and circuit description.**
- **The CD mechanism employed in this model is one of S7 series.**

CONTENTS

1. SAFETY INFORMATION 2
2. EXPLODED VIEWS AND PARTS LIST 3
3. SCHEMATIC DIAGRAM 12
4. PCB CONNECTION DIAGRAM 40
5. ELECTRICAL PARTS LIST 50
6. ADJUSTMENT 75
7. GENERAL INFORMATION 81
   7.1 PARTS 81
      7.1.1 IC 81
      7.1.2 DISPLAY 88
   7.2 DIAGNOSIS 89
      7.2.1 DISASSEMBLY 89
      7.2.2 TEST MODE 90
   7.3 BLOCK DIAGRAM 92
8. OPERATIONS AND SPECIFICATIONS 94

PIONEER ELECTRONIC CORPORATION 4-1, Meguro 1-Chome, Meguro-ku, Tokyo 153-8654, Japan
PIONEER ELECTRONICS SERVICE INC. P.O.Box 1760, Long Beach, CA 90801-1760 U.S.A.
PIONEER ELECTRONIC [EUROPE] N.V. Haven 1087 Keetberglaan 1, 9120 Melsele, Belgium
PIONEER ELECTRONICS ASIACENTRE PTE.LTD. 501 Orchard Road, #10-00, Lane Wheelock Place, Singapore 23880

© **PIONEER ELECTRONIC CORPORATION 1998**

K-FEA. FEB. 1998 Printed in Japan

● **CD Player Service Precautions**

1. For pickup unit(CXX1230) handling, please refer to"Disassembly"(CX-597 Service Manual CRT1829). During replacement, handling precautions shall be taken to prevent an electrostatic discharge(protection by a short pin).
2. During disassembly, be sure to turn the power off since an internal IC might be destroyed when a connector is plugged or unplugged.
3. Please checking the grating after changing the service pickup unit(see page 79).

1. SAFETY INFORMATION

CAUTION

This service manual is intended for qualified service technicians; it is not meant for the casual do-it-yourselfer.
Qualified technicians have the necessary test equipment and tools, and have been trained to properly and safely repair complex products such as those covered by this manual.
Improperly performed repairs can adversely affect the safety and reliability of the product and may void the warranty.
If you are not qualified to perform the repair of this product properly and safely; you should not risk trying to do so and refer the repair to a qualified service technician.

WARNING

Lead in solder used in this product is listed by the California Health and Welfare agency as a known reproductive toxicant which may cause birth defects or other reproductive harm (California Health and Safety Code, Section 25249.5). When servicing or handling circuit boards and other components which contain lead in solder, avoid unprotected skin contact with the solder. Also, when soldering do not inhale any smoke or fumes produced.

2. EXPLODED VIEWS AND PARTS LIST

2.1 PACKING

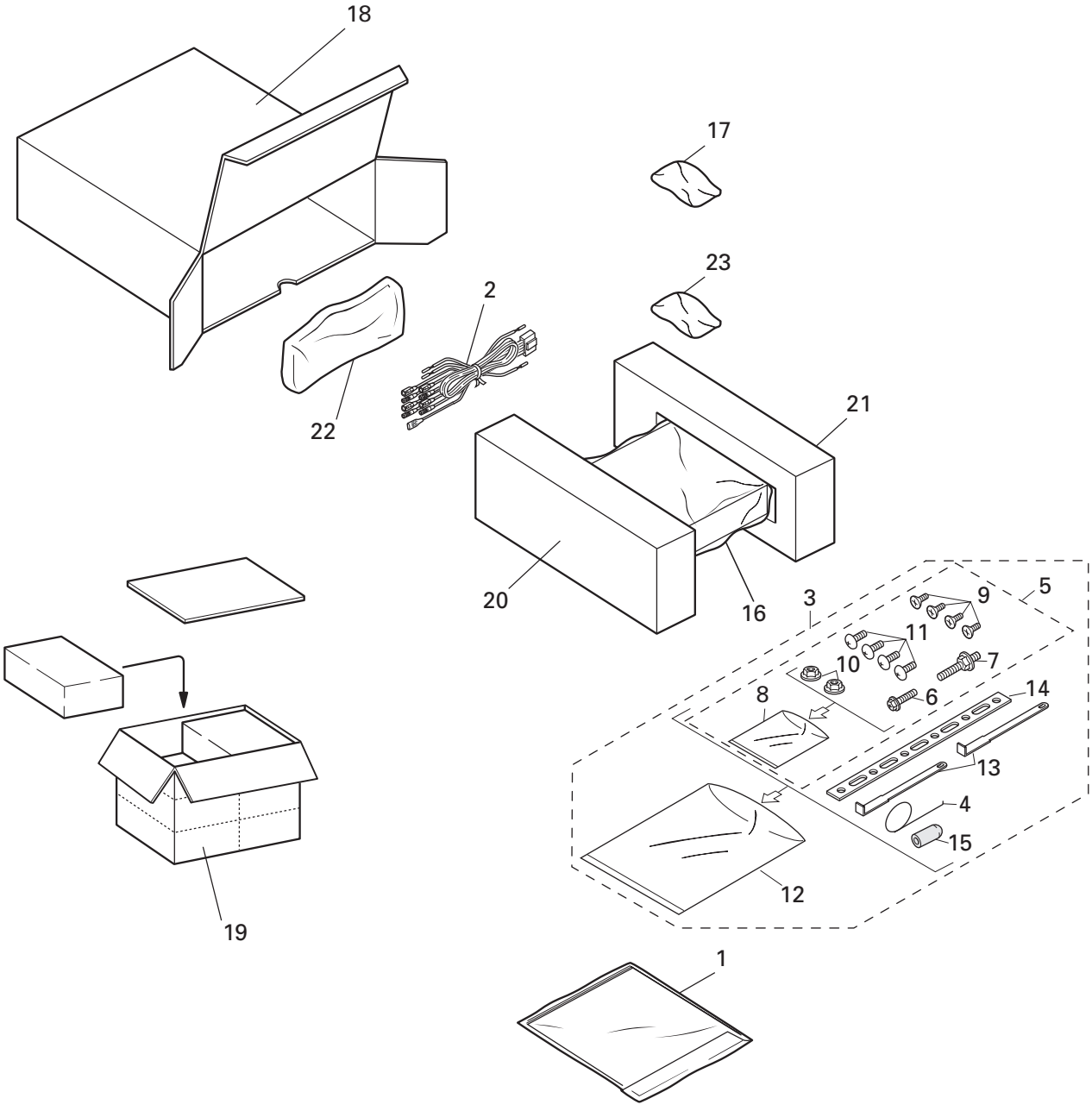

Fig. 1

NOTE:

- Parts marked by "*"are generally unavailable because they are not in our Master Spare Parts List.
- Screws adjacent to ∇ mark on the product are used for disassembly.

● PACKING SECTION PARTS LIST

(1) PARTS LIST

Mark	No.	Description	Part No.
*	1-1	Card	See Contrast table(2)
	1-2	Polyethylene Bag	CEG1116
	1-3	Owner's Manual	See Contrast table(2)
	1-4	Installation Manual	See Contrast table(2)
*	1-5	Warranty Card	See Contrast table(2)
	1-6	Caution Card	See Contrast table(2)
	2	Cord Assy	See Contrast table(2)
	3	Accessory Assy	CEA1918
	4	Spring	CBH-865
	5	Screw Assy	CEA1924
	6	Screw	CBA-102
	7	Screw	CBA1284
*	8	Polyethylene Bag	CNM4338
	9	Screw	CRZ50P090FMC
	10	Nut	NF50FMC
	11	Screw	TRZ50P080FMC
*	12	Polyethylene Bag	CEG-158
	13	Handle	CNC5395
	14	Strap	CNF-111
	15	Bush	CNV1009
	16	Polyethylene Bag	CEG1173
	17	Battery	See Contrast table(2)
	18	Carton	See Contrast table(2)
	19	Contain Box	See Contrast table(2)
	20	Protector	CHP1766
	21	Protector	CHP1767
	22	Case Assy	CXB1063
	23	Remote Control Unit	See Contrast table(2)

● Owner's Manual

Model	Part No.	Language
DEH-P645/UC	CRD2555	English, French
DEH-P56/UC	CRD2564	English, French
DEH-P545/UC	CRD2566	English, French, Spanish
DEH-46/UC	CRD2572	English, French, Spanish
DEH-445/UC	CRD2574	English, French, Spanish
DEH-41/UC	CRD2576	English, French, Spanish

● Installation Manual

Model	Part No.	Language
DEH-P645/UC	CRD2556	English, French
DEH-P56/UC	CRD2565	English, French
DEH-P545/UC	CRD2567	English, French, Spanish
DEH-46/UC	CRD2573	English, French, Spanish
DEH-445/UC	CRD2575	English, French, Spanish
DEH-41/UC	CRD2577	English, French, Spanish

(2) CONTRAST TABLE

DEH-P645/UC, DEH-P56/UC, DEH-P545/UC, DEH-46/UC, DEH-445/UC and DEH-41/UC are constructed same except for the following:

			Part No.	
Mark	No.	Symbol and Description	DEH-P645/UC	DEH-P56/UC
*	1-1	Card	ARY1048	Not used
	1-3	Owner's Manual	CRD2555	CRD2564
	1-4	Installation Manual	CRD2556	CRD2565
*	1-5	Warranty Card	Not used	CRY1070
	1-6	Caution Card	CRP1182	Not used
	17	Battery	CEX1030	Not used
	18	Carton	CHG3435	CHG3439
	19	Contain Box	CHL3435	CHL3439
	23	Remote Control Unit	CXB1225	Not used

Mark No.	Symbol and Description	Part No. DEH-P645/UC	DEH-P545/UC
1-3	Owner's Manual	CRD2555	CRD2566
1-4	Installation Manual	CRD2556	CRD2567
1-6	Caution Card	CRP1182	Not used
17	Battery	CEX1030	Not used
18	Carton	CHG3435	CHG3438
19	Contain Box	CHL3435	CHL3438
23	Remote Control Unit	CXB1225	Not used

Mark No.	Symbol and Description	Part No. DEH-P645/UC	DEH-46/UC
* 1-1	Card	ARY1048	Not used
1-3	Owner's Manual	CRD2555	CRD2572
1-4	Installation Manual	CRD2556	CRD2573
* 1-5	Warranty Card	Not used	CRY1070
1-6	Caution Card	CRP1182	Not used
17	Battery	CEX1030	Not used
18	Carton	CHG3435	CHG3443
19	Contain Box	CHL3435	CHL3443
23	Remote Control Unit	CXB1225	Not used

Mark No.	Symbol and Description	Part No. DEH-P645/UC	DEH-445/UC
1-3	Owner's Manual	CRD2555	CRD2574
1-4	Installation Manual	CRD2556	CRD2575
17	Battery	CEX1030	Not used
18	Carton	CHG3435	CHG3444
19	Contain Box	CHL3435	CHL3444
23	Remote Control Unit	CXB1225	Not used

Mark No.	Symbol and Description	Part No. DEH-P645/UC	DEH-41/UC
1-3	Owner's Manual	CRD2555	CRD2576
1-4	Installation Manual	CRD2556	CRD2577
1-6	Caution Card	CRP1182	Not used
2	Cord Assy	CDE5483	CDE5484
17	Battery	CEX1030	Not used
18	Carton	CHG3435	CHG3445
19	Contain Box	CHL3435	CHL3445
23	Remote Control Unit	CXB1225	Not used

2.2 EXTERIOR

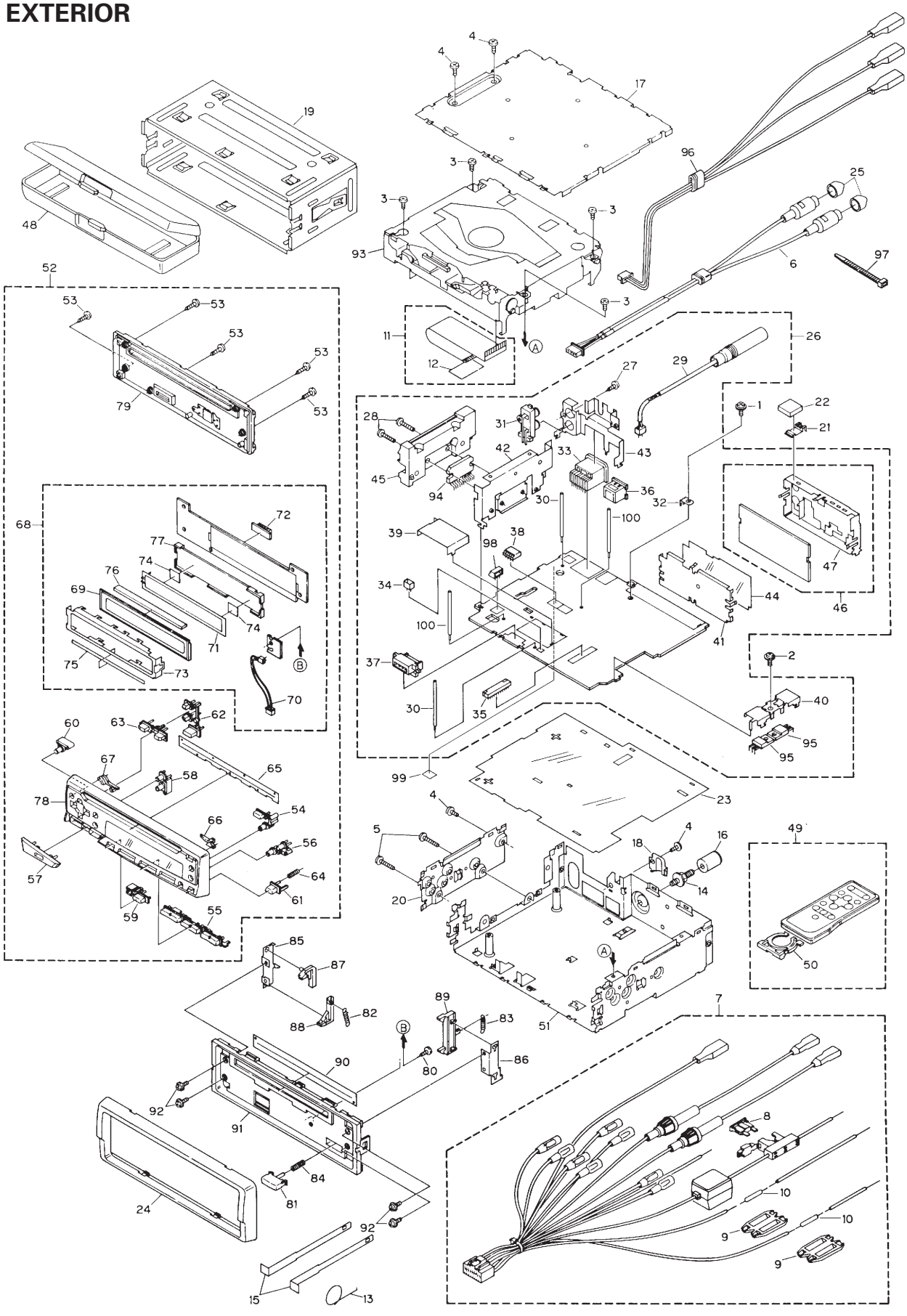

Fig. 2

● EXTERIOR SECTION PARTS LIST

(1) PARTS LIST

Mark	No.	Description	Part No.
	1	Screw	ASZ26P055FUC
	2	Screw	ASZ26P080FMC
	3	Screw	BSZ26P050FMC
	4	Screw	BSZ30P060FMC
	5	Screw	BSZ30P180FMC
	6	Cord Assy	See Contrast table(2)
	7	Cord Assy	See Contrast table(2)
	8	Fuse	CEK1136
	9	Cap	CNS1472
	10	Resistor	RS1/2PMF102J
	11	Cable	CDE5635
	12	Insulator	CNM5761
	13	Spring	CBH-865
	14	Screw	CBA1284
	15	Handle	CNC5395
	16	Bush	CNV1009
	17	Case	CNB2119
	18	Holder	CNC4963
	19	Holder	CNC6798
	20	Holder	CNC6862
	21	Earth Terminal	CNC7358
	22	Spacer	CNM4913
	23	Insulator	CNM5535
	24	Panel	CNS4200
	25	Cap	See Contrast table(2)
	26	Tuner Amp Unit	See Contrast table(2)
	27	Screw	BPZ26P080FMC
	28	Screw	BSZ26P140FMC
	29	Antenna Cord	CDH1234
	30	Clamper	CEF1009
	31	Pin Jack(CN253)	CKB1028
	32	Terminal(CN501)	CKF1059
	33	Plug(CN901)	CKM1278
	34	Plug(CN802)	CKS-783
	35	Connector(CN651)	CKS2228
	36	Connector(CN101)	See Contrast table(2)
	37	Connector(CN801)	CKS3581
	38	Connector(CN255)	See Contrast table(2)
	39	Holder	CNC5968
	40	Holder	CNC6132
	41	Holder	CNC6356
	42	Holder	CNC7429
	43	Holder	See Contrast table(2)
	44	Insulator	CNM4684
	45	Heat Sink	CNR1458
	46	FM/AM Tuner Unit	CWE1417
	47	Holder	CNC6555
	48	Case Assy	CXB1063
	49	Remote Control Unit	See Contrast table(2)
	50	Cover	See Contrast table(2)
	51	Chassis Unit	See Contrast table(2)
	52	Detach Grille Assy	See Contrast table(2)
	53	Screw	BPZ20P100FZK
	54	Button	CAC5397
	55	Button	CAC5398
	56	Button	CAC5399
	57	Button	CAC5402
	58	Button	CAC5403
	59	Button	CAC5404
	60	Button	CAC5405
	61	Button	CAC5430
	62	Button	CAC5450
	63	Button	CAC5451
	64	Spring	CBH2103
	65	Cover	CNM4704
	66	Lighting Conductor	CNV5180
	67	Lighting Conductor	CNV5181
	68	Keyboard Unit	See Contrast table(2)
	69	LCD	See Contrast table(2)
	70	Cord	CDE5665
	71	EL	CEL1536
	72	Connector(CN1801)	CKS3580
	73	Holder	CNC7435
	74	Film	CNM4349
	75	Spacer	CNM5449
	76	Connector	CNV5182
	77	Housing	CNV5183
	78	Grille Unit	See Contrast table(2)
	79	Cover Unit	CXB2480
	80	Screw	BPZ20P060FMC
	81	Button	CAC5180
	82	Spring	CBH1834
	83	Spring	CBH1835
	84	Spring	CBH1996
	85	Bracket	CNC6135
	86	Bracket	CNC6791
	87	Arm	CNV4692
	88	Arm	CNV4693
	89	Arm	CNV4951
	90	Cover	CNM4875

Mark	No.	Description	Part No.
	91	Panel	See Contrast table(2)
	92	Screw	IMS20P030FZK
	93	CD Mechanism Module	CXK5004
	94	IC(IC201)	See Contrast table(2)
	95	Transistor(Q951, 971)	2SD2396
	96	Cord Assy	See Contrast table(2)
	97	Lock Tie	See Contrast table(2)
	98	Connector(CN851)	See Contrast table(2)
	99	Spacer	CNM5875
	100	Clamper	See Contrast table(2)

(2) CONTRAST TABLE

DEH-P645/UC, DEH-P56/UC, DEH-P545/UC, DEH-46/UC, DEH-445/UC and DEH-41/UC are constructed same except for the following:

Mark	No.	Symbol and Description	Part No.	
			DEH-P645/UC	DEH-P56/UC
	6	Cord Assy	CDE5208	CDE5210
	25	Cap	CNV2680(×2)	CNV2680(×4)
	26	Tuner Amp Unit	CWM5620	CWM5625
	38	Connector	CKS3598(CN255)	CKS3602(CN251)
	43	Holder	CNC7432	CNC7431
	49	Remote Control Unit	CXB1225	Not used
	50	Cover	CNS4139	Not used
	51	Chassis Unit	CXB1983	CXB1982
	52	Detach Grille Assy	CXB1994	CXB2000
	68	Keyboard Unit	CWM5634	CWM5636
	69	LCD	CAW1479	CAW1459
	78	Grille Unit	CXB1968	CXB1973
	96	Cord Assy	Not used	CDE5184
*	97	Lock Tie	Not used	CNV-754
	98	Connector(CN851)	Not used	CKS3597
	100	Clamper	Not used	CEF1009

Mark	No.	Symbol and Description	Part No.	
			DEH-P645/UC	DEH-P545/UC
	26	Tuner Amp Unit	CWM5620	CWM5626
	49	Remote Control Unit	CXB1225	Not used
	50	Cover	CNS4139	Not used
	52	Detach Grille Assy	CXB1994	CXB2001
	68	Keyboard Unit	CWM5634	CWM5636
	69	LCD	CAW1479	CAW1459
	78	Grille Unit	CXB1968	CXB1974

Mark No.	Symbol and Description	Part No. DEH-P645/UC	DEH-46/UC
6	Cord Assy	CDE5208	CDE5210
25	Cap	CNV2680(×2)	CNV2680(×4)
26	Tuner Amp Unit	CWM5620	CWM5627
36	Connector(CN101)	CKS3408	Not used
38	Connector	CKS3598(CN255)	CKS3602(CN251)
43	Holder	CNC7432	CNC7431
49	Remote Control Unit	CXB1225	Not used
50	Cover	CNS4139	Not used
51	Chassis Unit	CXB1983	CXB1988
52	Detach Grille Assy	CXB1994	CXB2003
68	Keyboard Unit	CWM5634	CWM5640
78	Grille Unit	CXB1968	CXB1976
91	Panel	CNS4451	CNS4450
94	IC(IC201)	TDA7386	TDA7384
96	Cord Assy	Not used	CDE5184
* 97	Lock Tie	Not used	CNV-754
98	Connector(CN851)	Not used	CKS3597
100	Clamper	Not used	CEF1009

Mark No.	Symbol and Description	Part No. DEH-P645/UC	DEH-445/UC
26	Tuner Amp Unit	CWM5620	CWM5628
36	Connector(CN101)	CKS3408	Not used
49	Remote Control Unit	CXB1225	Not used
50	Cover	CNS4139	Not used
51	Chassis Unit	CXB1983	CXB1989
52	Detach Grille Assy	CXB1994	CXB2004
68	Keyboard Unit	CWM5634	CWM5640
78	Grille Unit	CXB1968	CXB1977
91	Panel	CNS4451	CNS4450
94	IC(IC201)	TDA7386	TDA7384

Mark No.	Symbol and Description	Part No. DEH-P645/UC	DEH-41/UC
6	Cord Assy	CDE5208	Not used
7	Cord Assy	CDE5483	CDE5484
25	Cap	CNV2680	Not used
26	Tuner Amp Unit	CWM5620	CWM5629
36	Connector(CN101)	CKS3408	Not used
38	Connector(CN255)	CKS3598	Not used
43	Holder	CNC7432	CNC7434
49	Remote Control Unit	CXB1225	Not used
50	Cover	CNS4139	Not used
51	Chassis Unit	CXB1983	CXB1989
52	Detach Grille Assy	CXB1994	CXB2005
68	Keyboard Unit	CWM5634	CWM5640
78	Grille Unit	CXB1968	CXB1978
91	Panel	CNS4451	CNS4869
94	IC(IC201)	TDA7386	TDA7384

2.3 CD MECHANISM MODULE

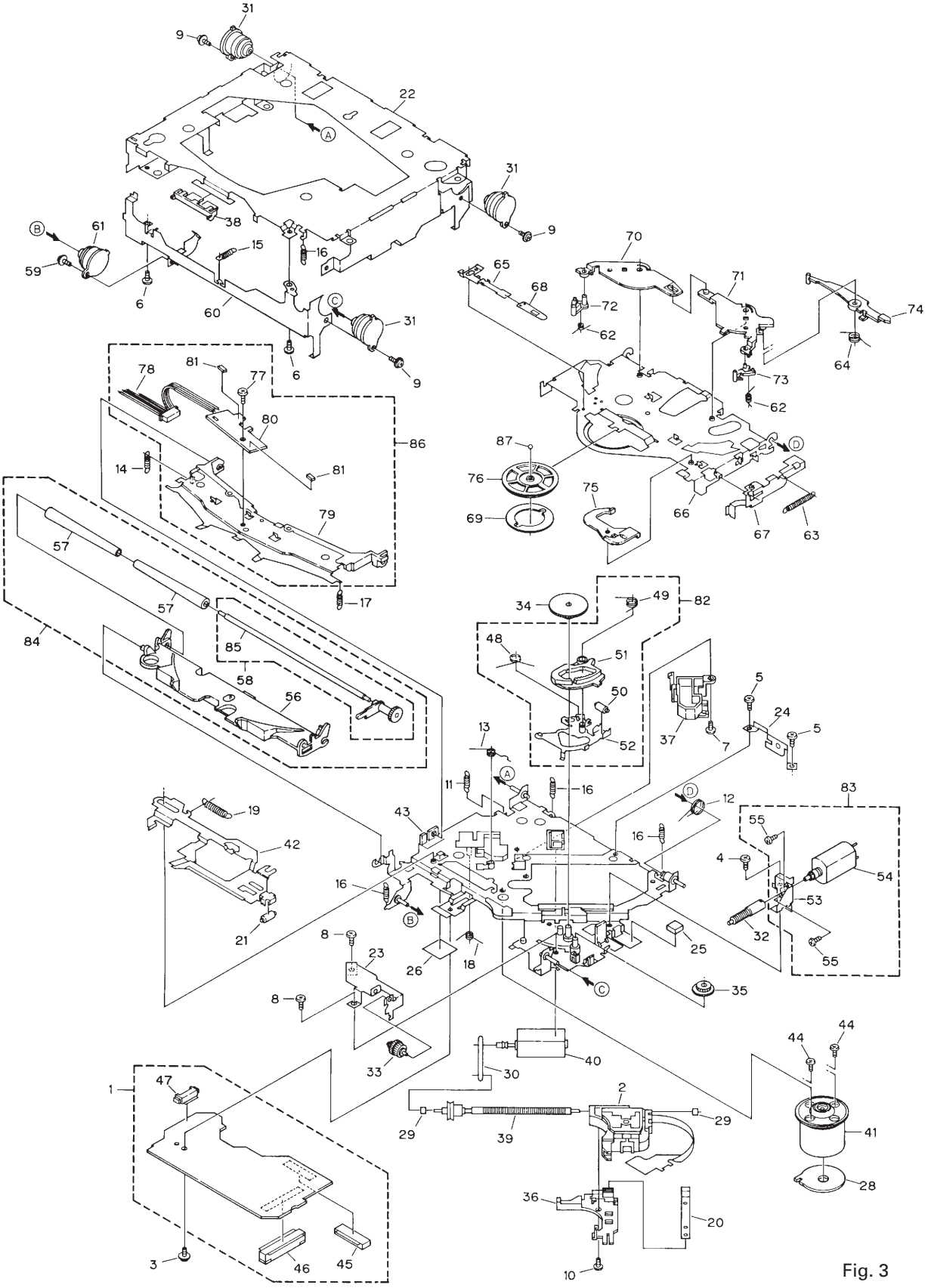

Fig. 3

● CD MECHANISM MODULE SECTION PARTS LIST

Mark	No.	Description	Part No.
	1	Control Unit	CWX2224
	2	Pickup Unit(Service)	CXX1230
	3	Screw	IMS26P035FMC
	4	Screw	BMZ20P025FMC
	5	Screw	BMZ20P040FMC
	6	Screw	BSZ20P040FMC
	7	Screw	CBA1077
	8	Screw	CBA1250
	9	Screw	CBA1296
	10	Screw	CBA1362
	11	Spring	CBH1724
	12	Spring	CBH1729
	13	Spring	CBH1730
	14	Spring	CBH1731
	15	Spring	CBH1732
	16	Spring	CBH1745
	17	Spring	CBH1848
	18	Spring	CBH1849
	19	Spring	CBH1939
	20	Spring	CBL1214
	21	Roller	CLA2627
	22	Frame	CNC5796
	23	Bracket	CNC5871
*	24	Bracket	CNC6376
	25	Cushion	CNM3917
	26	Sheet	CNM4873
	27	•••••	
	28	PCB	CNP4230
	29	Bearing	CNR1415
	30	Belt	CNT1071
	31	Damper	CNV3974
	32	Gear	CNV4128
	33	Gear	CNV4129
	34	Gear	CNV4130
	35	Gear	CNV4131
	36	Holder	CNV4663
	37	Holder	CNV5071
	38	Guide	CNV4484
	39	Screw Unit(S7)	CXA8699
	40	CRG Motor Unit(S7)	CXA8986
	41	Motor Unit	CXA8912
	42	Lever Unit	CXA9300
	43	Chassis Unit	CXB2574
	44	Screw	JFZ20P025FMC
	45	Connector(CN101)	CKS1953
	46	Connector(CN701)	CKS2774
	47	Connector(CN801)	CKS2196
	48	Spring	CBH1832
	49	Spring	CBH1833
	50	Roller	CLA2627
	51	Arm	CNV4136
	52	Arm Unit	CXA8565
	53	Bracket	CNC6056
	54	Load Motor Unit(S7)	CXA8702
	55	Screw	JFZ20P025FMC
	56	Arm	CNV4120
	57	Roller	CNV4509
	58	Gear Unit(S7)	CXA8701
	59	Screw	CBA1296
	60	Frame	CNC5797
	61	Damper	CNV3974
	62	Spring	CBH1736
	63	Spring	CBH1863
	64	Spring	CBH1945
	65	Spring	CBL1269
	66	Arm	CNC5799
	67	Lever	CNC6054
	68	Spacer	CNM3315
	69	Sheet	CNM4849
	70	Arm	CNV5436
	71	Arm	CNV4123
	72	Arm	CNV4124
	73	Arm	CNV4125
	74	Arm	CNV4138
	75	Arm	CNV4139
	76	Clamper	CNV5308
	77	Screw	CBA1250
	78	Connector(CN1)	CDE4576
	79	Arm	CNC7383
*	80	Gathering PCB	CNX2445
	81	Photo-transistor(Q1, 2)	CPT-230S-X
	82	ELBO Arm Assy(S7)	CXA8889
	83	Load Motor Assy(S7)	CXA8891
	84	LO Arm Assy(S7)	CXA8892
	85	Shaft	CLA3133
	86	Guide Arm Assy(S7)	CXB1850
	87	Ball	CNR1189

3. SCHEMATIC DIAGRAM

3.1 OVERALL CONNECTION DIAGRAM(GUIDE PAGE)

Note: When ordering service parts, be sure to refer to "EXPLODED VIEWS AND PARTS LIST" or "ELECTRICAL PARTS LIST".

● **DEH-P645/UC,DEH-P545/UC,DEH-445/UC,DEH-41/UC**

A-a

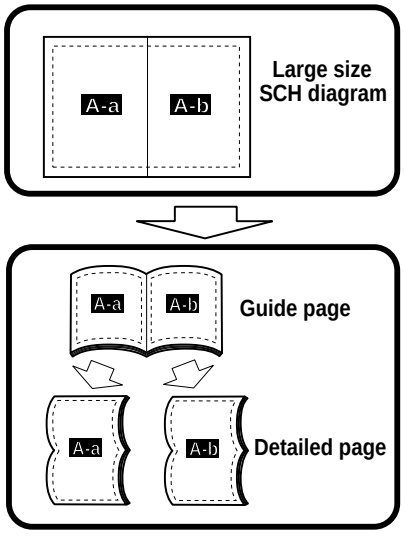

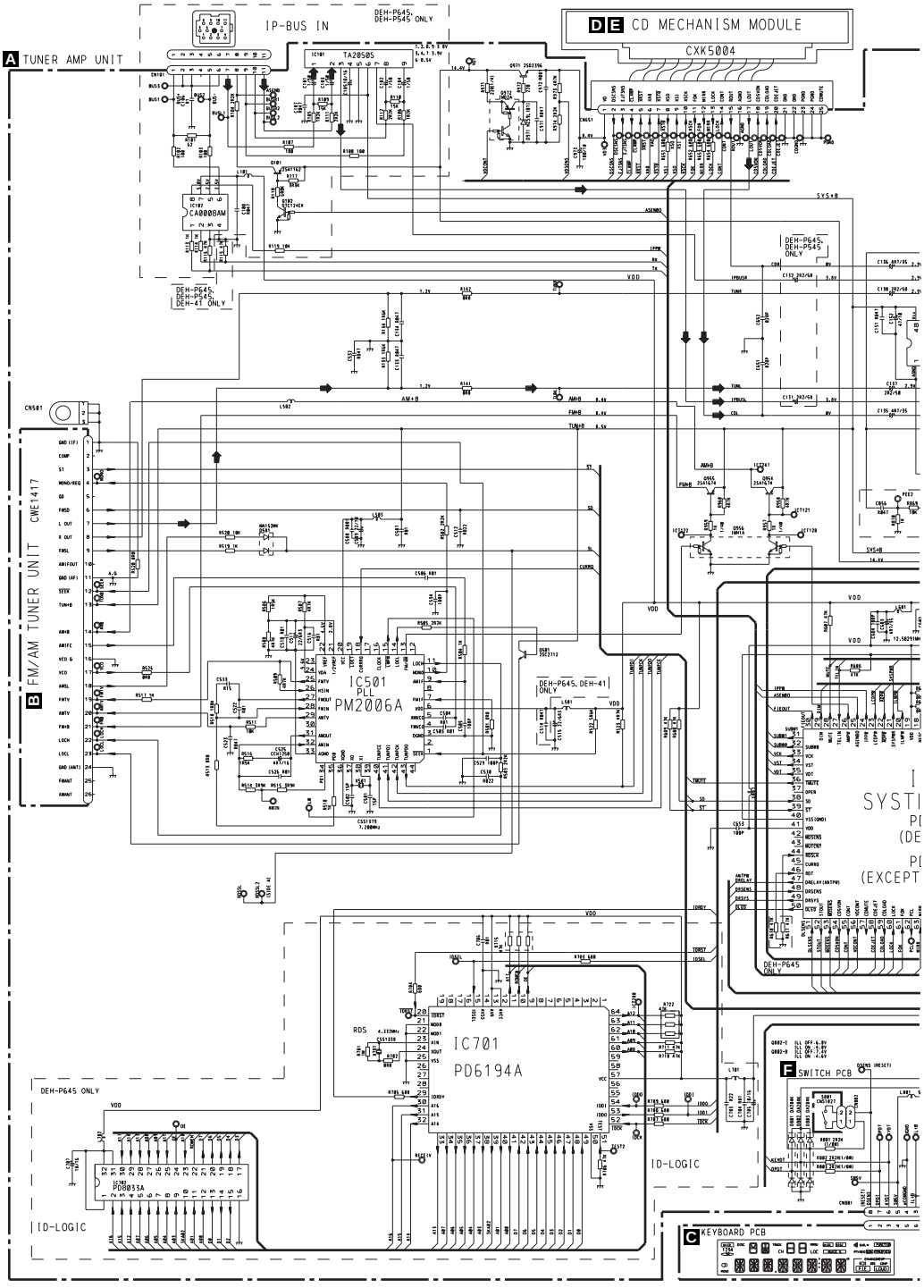

A-b

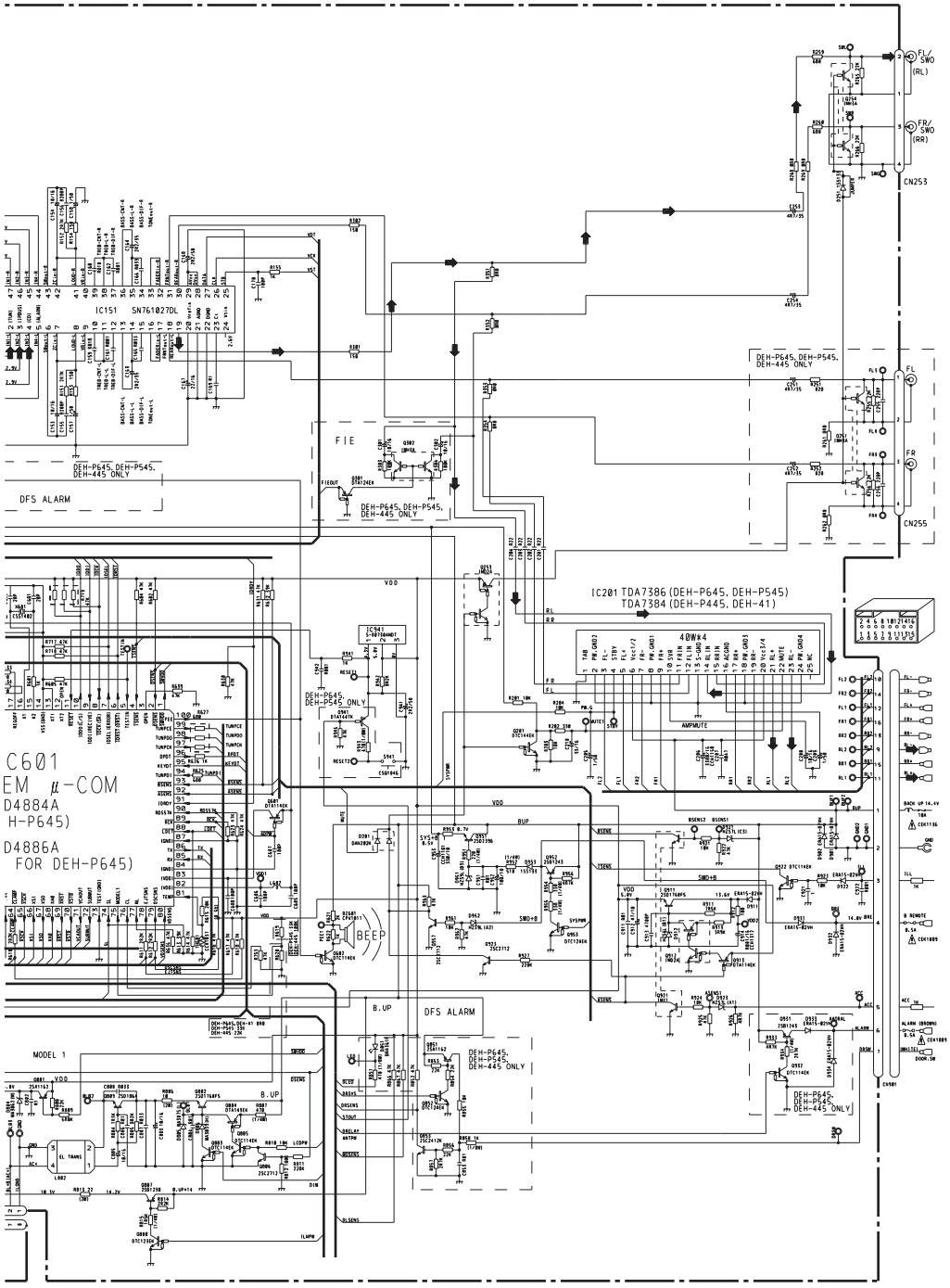

NOTE:
- ⬭ Symbol indicates a resistor. No differentiation is made between chip resistors and discrete resistors.
- ⊣⊢ Symbol indicates a capacitor. No differentiation is made between chip capacitors and discrete capacitors.

Decimal points for resistor and capacitor fixed values are expressed as:
2.2→2R2
0.022→R022

The △mark found on some component parts indicates the importance of the safety factor of the part. Therefore, when replacing, be sure to use parts of identical designation.

Fig. 4

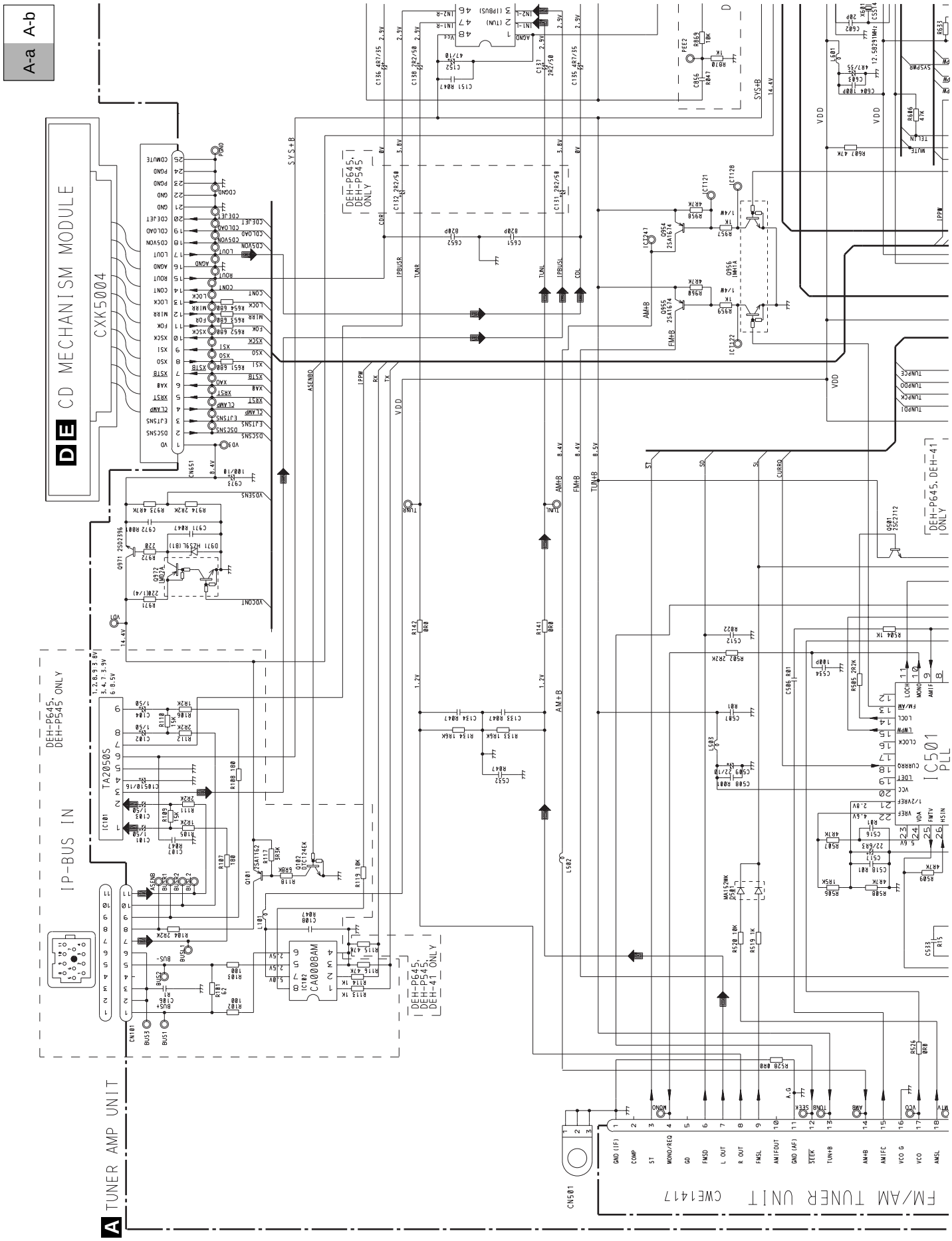
A-a
A-b
DE CD MECHANISM MODULE
CXK5004
DEH-P645, DEH-P545 ONLY
DEH-P645, DEH-P545 ONLY
IP-BUS IN
TA2050S
CA0008AM
DEH-P645, DEH-P545, DEH-41 ONLY
DEH-P645, DEH-41 ONLY
IC501
PLL
A TUNER AMP UNIT
FM/AM TUNER UNIT
CWE1417
CN501

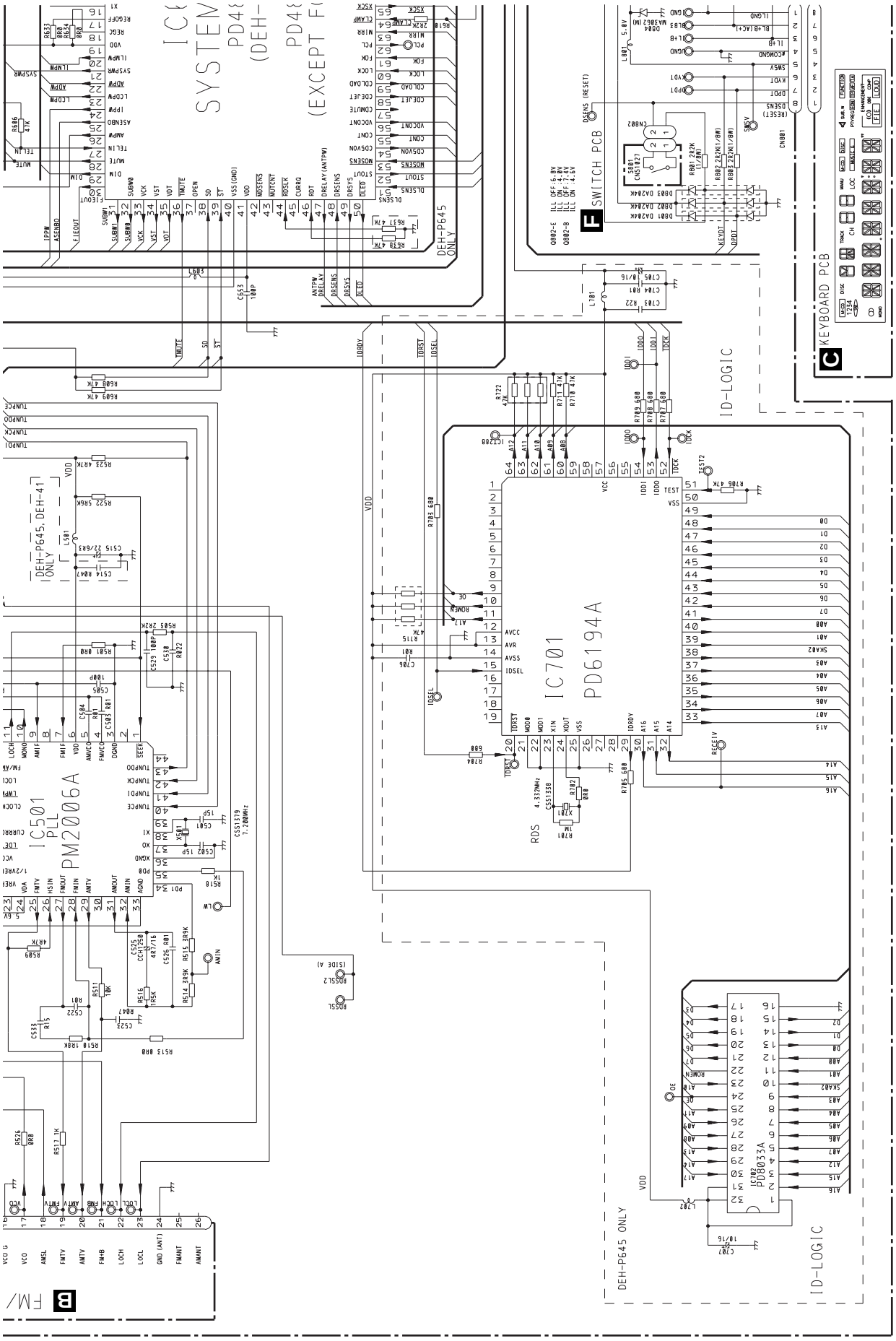
IC701
PD6194A
IC501
PLL
PM2006A
IC702
PD8033A
SWITCH PCB
KEYBOARD PCB
ID-LOGIC
DEH-P645 ONLY
DEH-P645, DEH-41 ONLY
RDS
FM/

Fig. 5

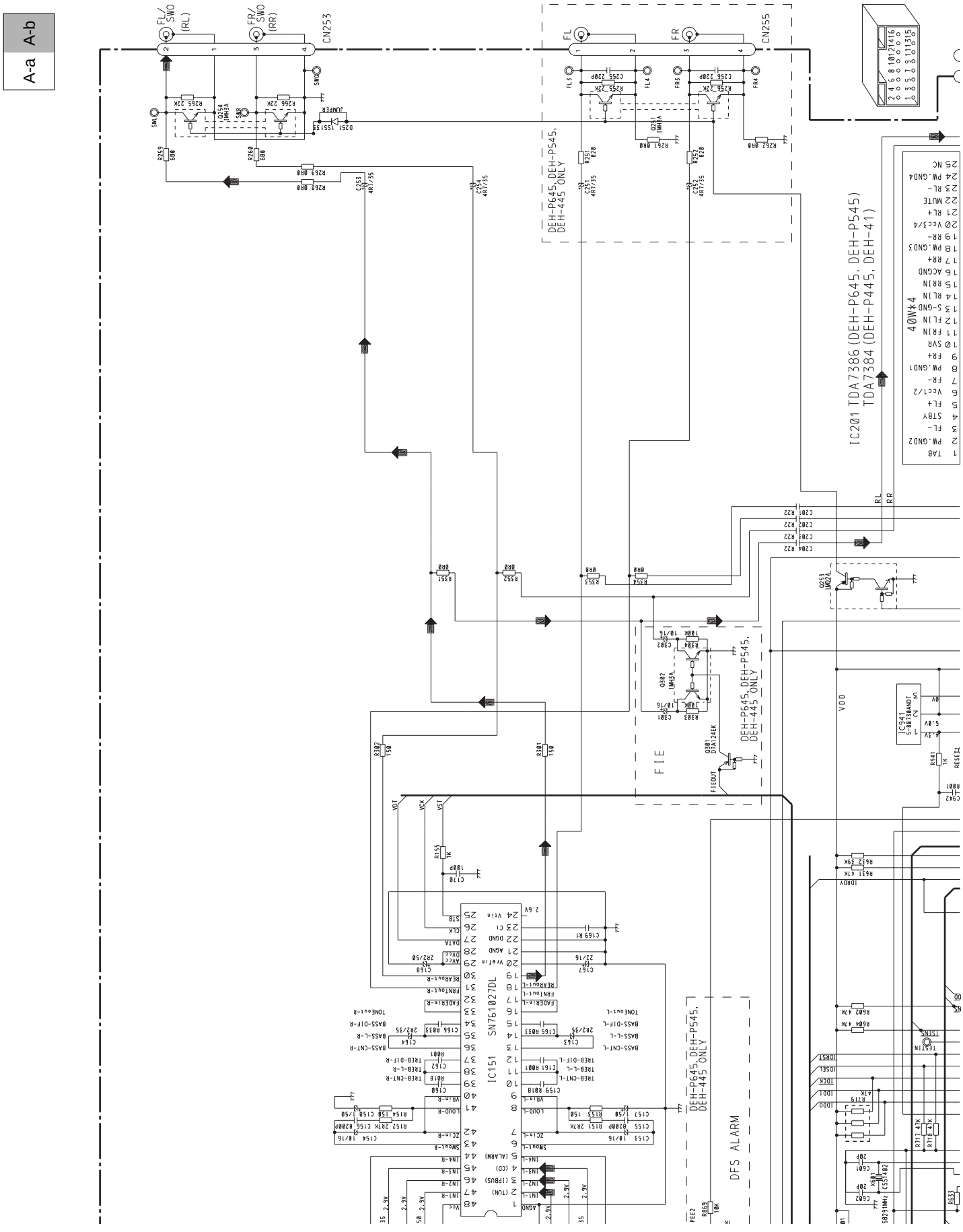
A-b
A-a
FL/ SWO (RL)
FR/ SWO (RR)
CN253
CN255
DEH-P645,DEH-P545, DEH-445 ONLY
IC201 TDA7386 (DEH-P645, DEH-P545) TDA7384 (DEH-P445, DEH-41)
IC151 SN761027DL
DFS ALARM
FIE
VDD

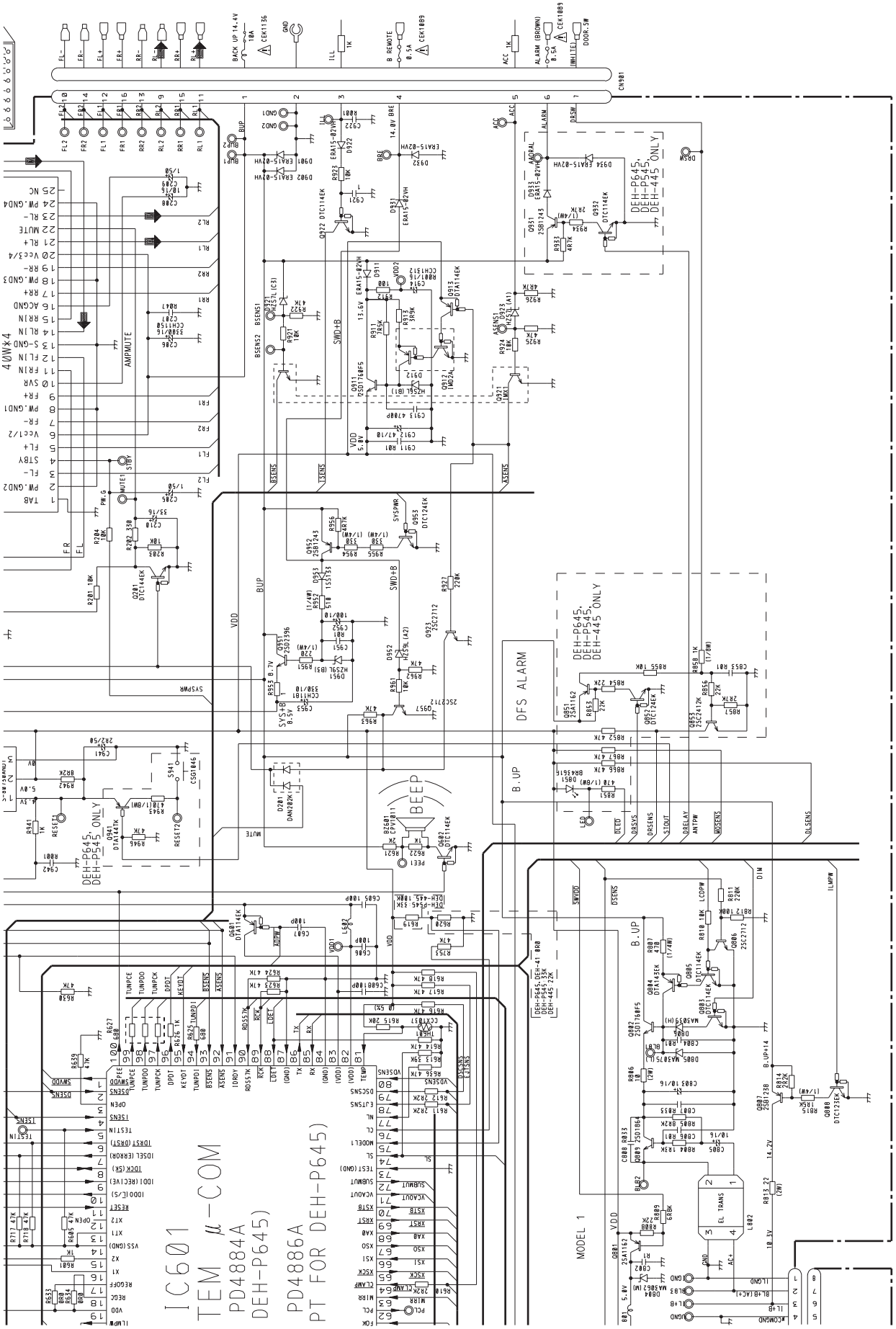

A-a A-b

The △mark found on some component parts indicates the importance of the safety factor of the part. Therefore, when replacing, be sure to use parts of identical designation.

Decimal points for resistor and capacitor fixed values are expressed as:
2.2→2R2
0.022→R022

NOTE:
Symbol indicates a resistor.
No differentiation is made between chip resistors and discrete resistors.
Symbol indicates a capacitor.
No differentiation is made between chip capacitors and discrete capacitors.

Fig. 6

3.2 OVERALL CONNECTION DIAGRAM(GUIDE PAGE)

● **DEH-P56/UC,DEH-46/UC**

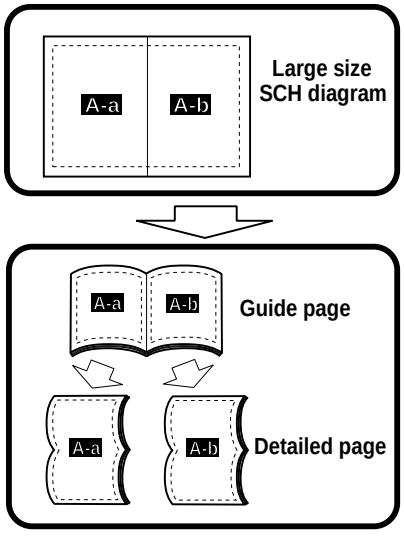

A-a

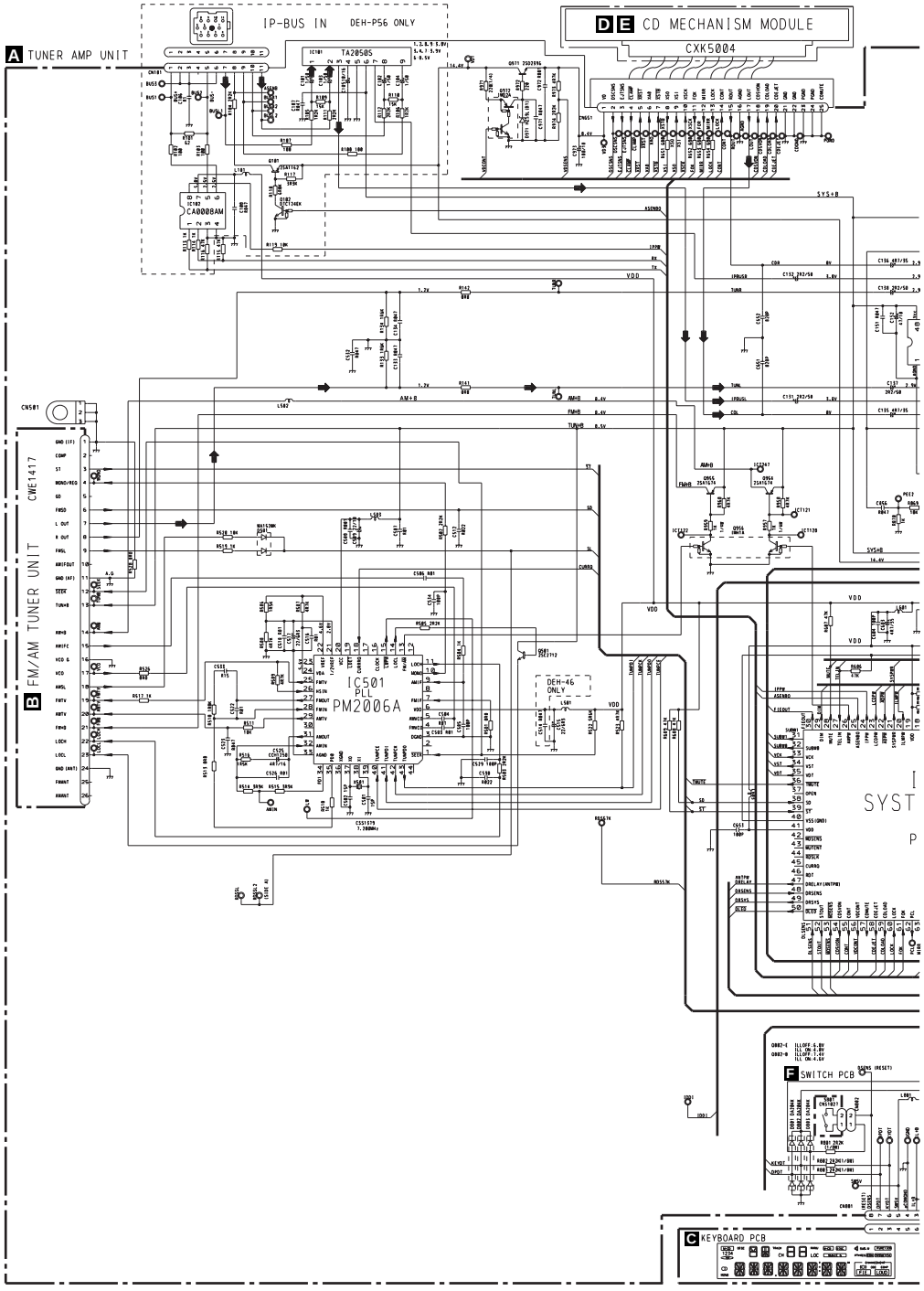

A-b

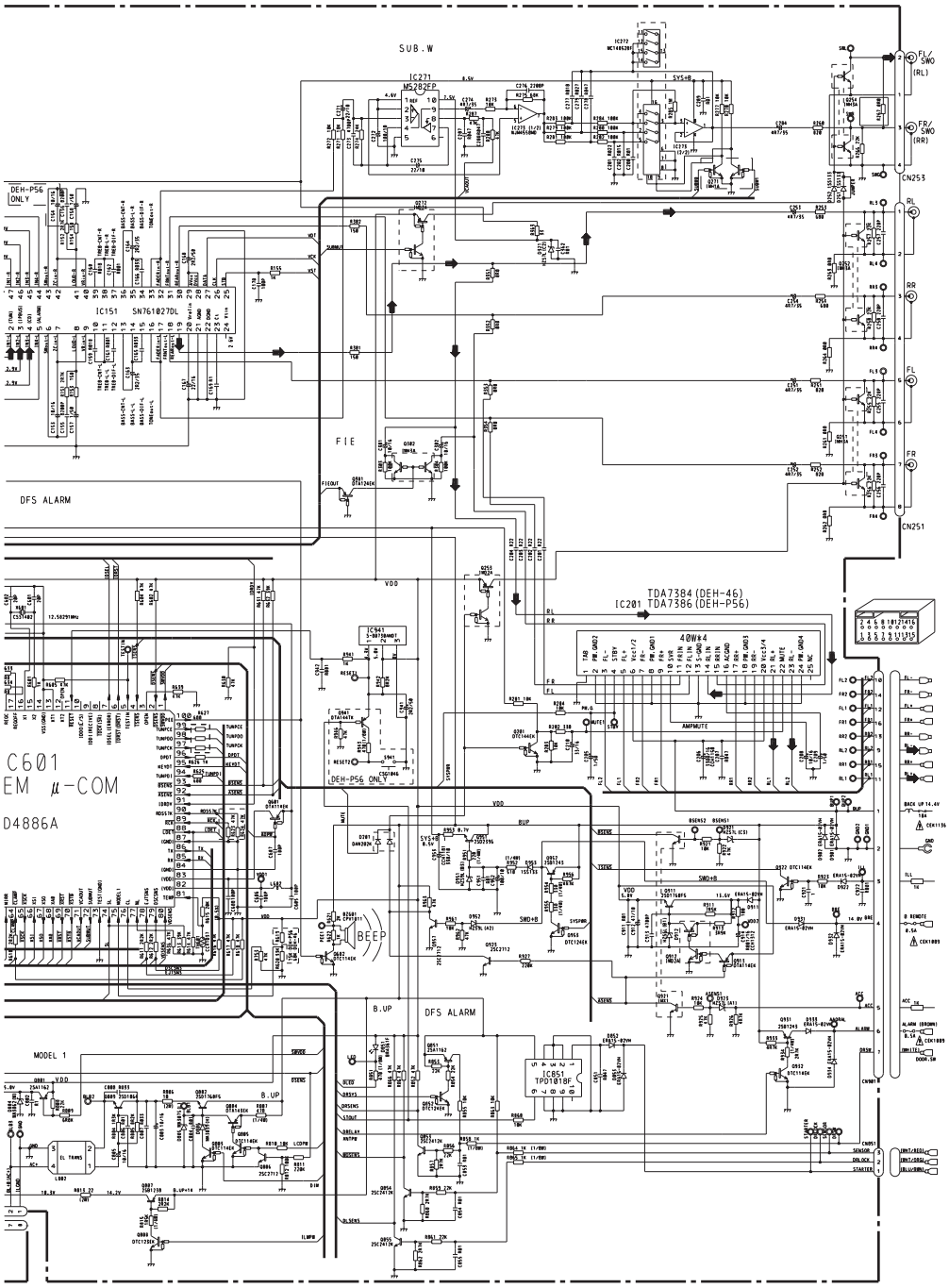

NOTE

Symbol indicates a resistor. No differentiation is made between chip resistors and discrete resistors.

Symbol indicates a capacitor. No differentiation is made between chip capacitors and discrete capacitors.

Decimal points for resistor and capacitor fixed values are expressed as
2.2→2R2
0.022→R022

The Δmark found on some component parts indicates the importance of the safety factor of the part. Therefore, when replacing, be sure to use parts of identical designation.

Fig. 7

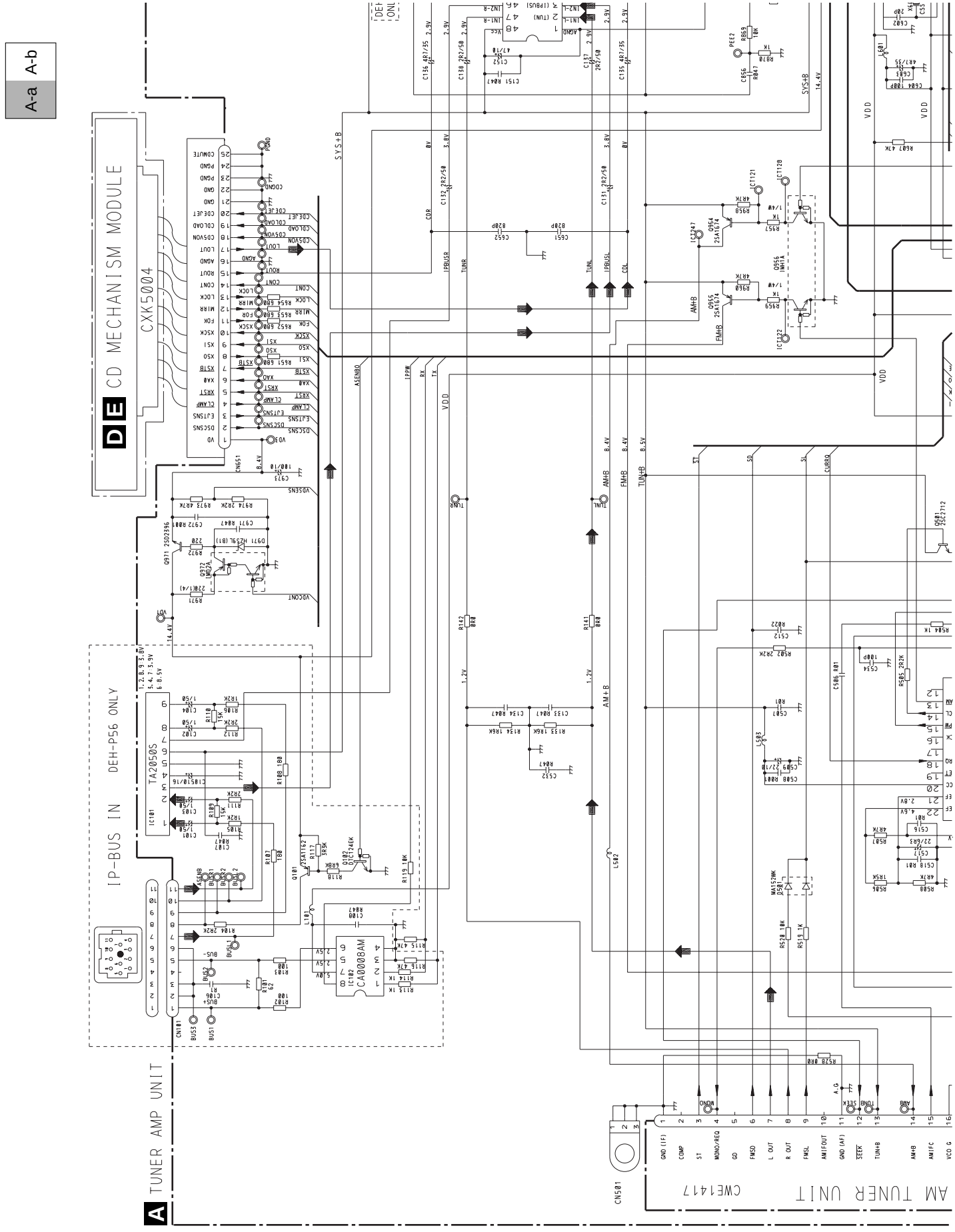
A-a
A-b
DE CD MECHANISM MODULE
CXK5004
IP-BUS IN
DEH-P56 ONLY
TA2050S
CA0008AM
A TUNER AMP UNIT
AM TUNER UNIT
CWE1417
CN501
SYS+B
VDD
AM+B
FM+B
TUN+B
ASENBO
IPPW
RX
TX
TUNL
IPBUSL
CDL
CDR
IPBUSR
TUNR
CURRQ
ST
SO
SL
MONO
SEEK
TUNB
AMB
A.G
GND (IF)
COMP
ST
MONO/REQ
GD
FMSD
L OUT
R OUT
FMSL
AMIFOUT
GND (AF)
SEEK
TUN+B
AM+B
AMIFC
VCO G

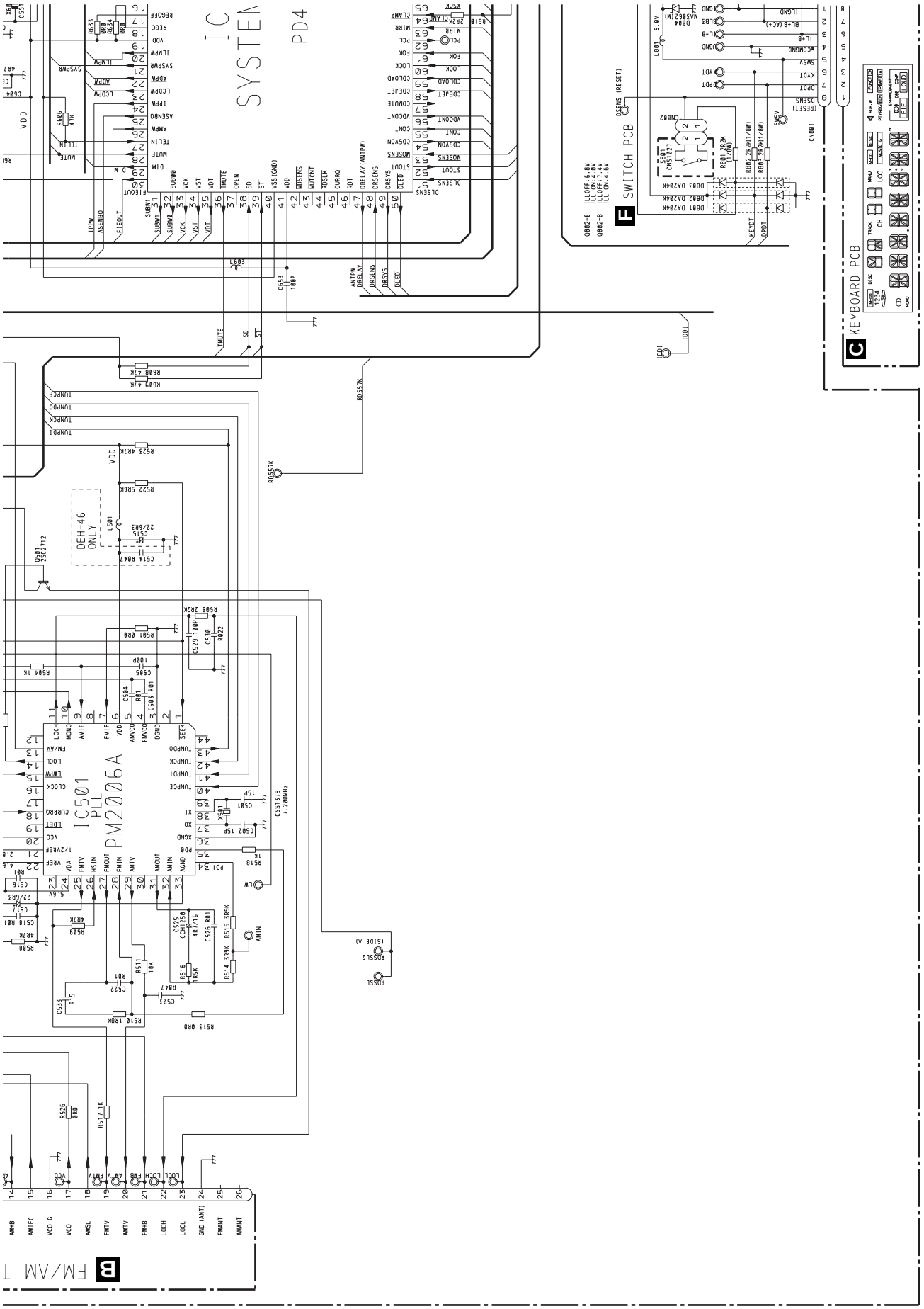
IC SYSTEM PD4
SWITCH PCB
KEYBOARD PCB
IC501 PLL PM2006A
DEH-46 ONLY
FM/AM T
A-b
A-a

Fig. 8

A-a A-b

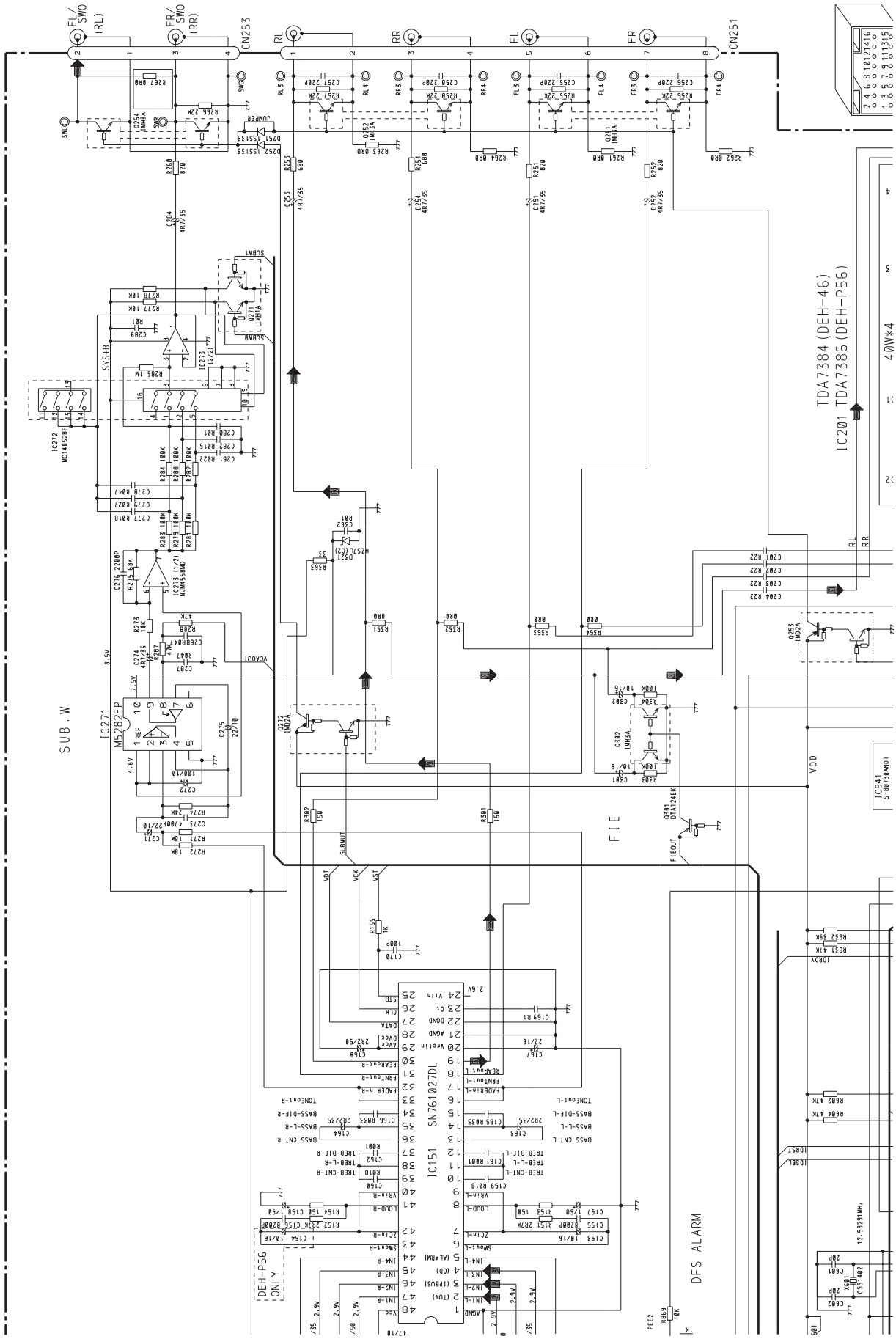
FL/SWO (RL)
FR/SWO (RR)
CN253
RL
RR
FL
FR
CN251
TDA7384 (DEH-46)
IC201 TDA7386 (DEH-P56)
40W×4
SUB.W
IC271
M5282FP
IC151
SN761027DL
DFS ALARM
DEH-P56 ONLY
FIE
VDD
SUBMUT
VCAOUT
SYS+B
IC272
NC14052BF
IC273 (1/2)
NJM4558MD
IC941
S-80730ANDT
12.58291MHz

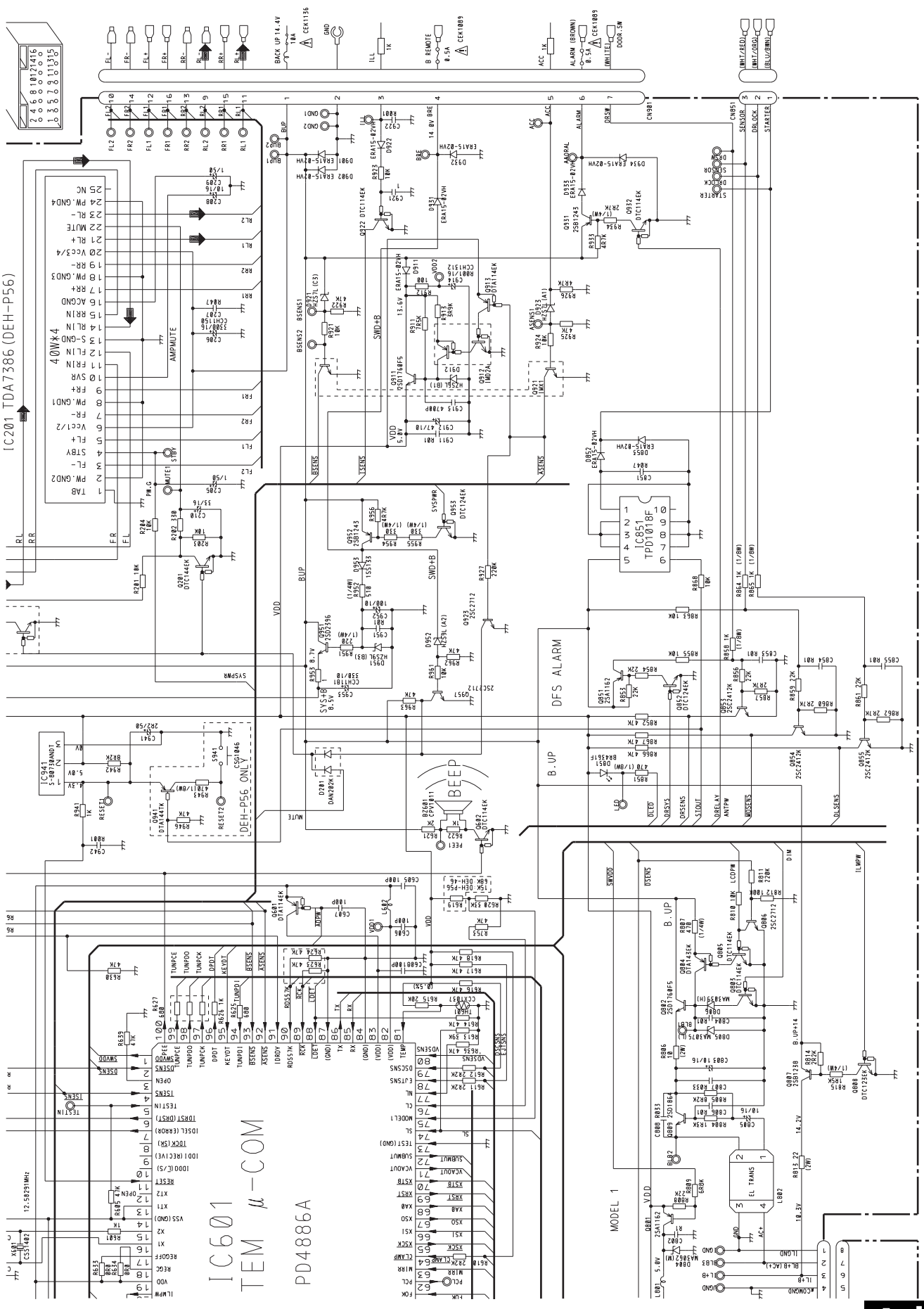

NOTE:
- Symbol indicates a resistor. No differentiation is made between chip resistors and discrete resistors.
- Symbol indicates a capacitor. No differentiation is made between chip capacitors and discrete capacitors.

The △mark found on some component parts indicates the importance of the safety factor of the part. Therefore, when replacing, be sure to use parts of identical designation.

Decimal points for resistor and capacitor fixed values are expressed as:
2.2→2R2
0.022→R022

Fig. 9

3.3 CD MECHANISM MODULE(GUIDE PAGE)

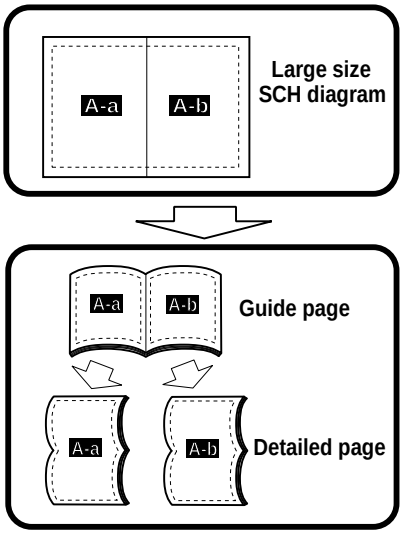

D-a

SERVICE PICKUP UNIT(CXX1230)

D CONTROL UNIT

RF AMP/AUTO POWER CONTROL

IC101 UPC2572GS

IC301 BA6997FM

CD DRIVER

REGULATOR

LOADING DRIVER

IC302 BA6285FP

HOLOGRAM UNIT

FOCUS ACT.

TRACKING ACT.

SIGNAL LINE
FOCUS SERVO LINE
TRACKING SERVO LINE
CARRIAGE SERVO LINE
SPINDLE SERVO LINE

E PHOTO UNIT

CXA8912

CXA8986

CXA8702

SWITCHES:
CONTROL UNIT
S801:HOME SWITCH·····ON-OFF
S802:CLAMP SWITCH·····ON-OFF
The underlined indicates the switch position.

D-b

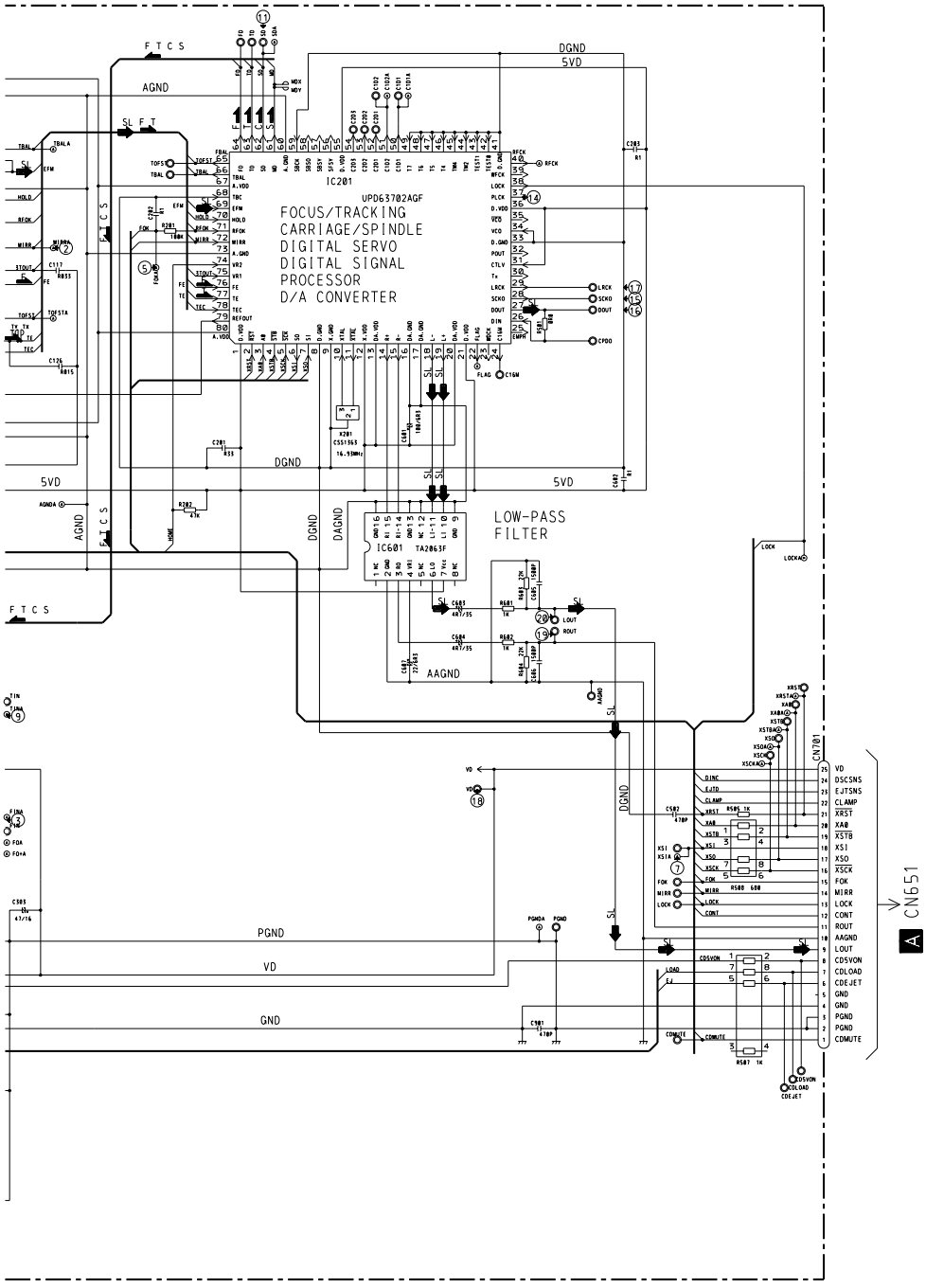
IC201
UPD63702AGF
FOCUS/TRACKING
CARRIAGE/SPINDLE
DIGITAL SERVO
DIGITAL SIGNAL
PROCESSOR
D/A CONVERTER
IC601 TA2063F
LOW-PASS
FILTER
CN701
CN651
AGND
DGND
5VD
AAGND
PGND
VD
GND

Fig. 10

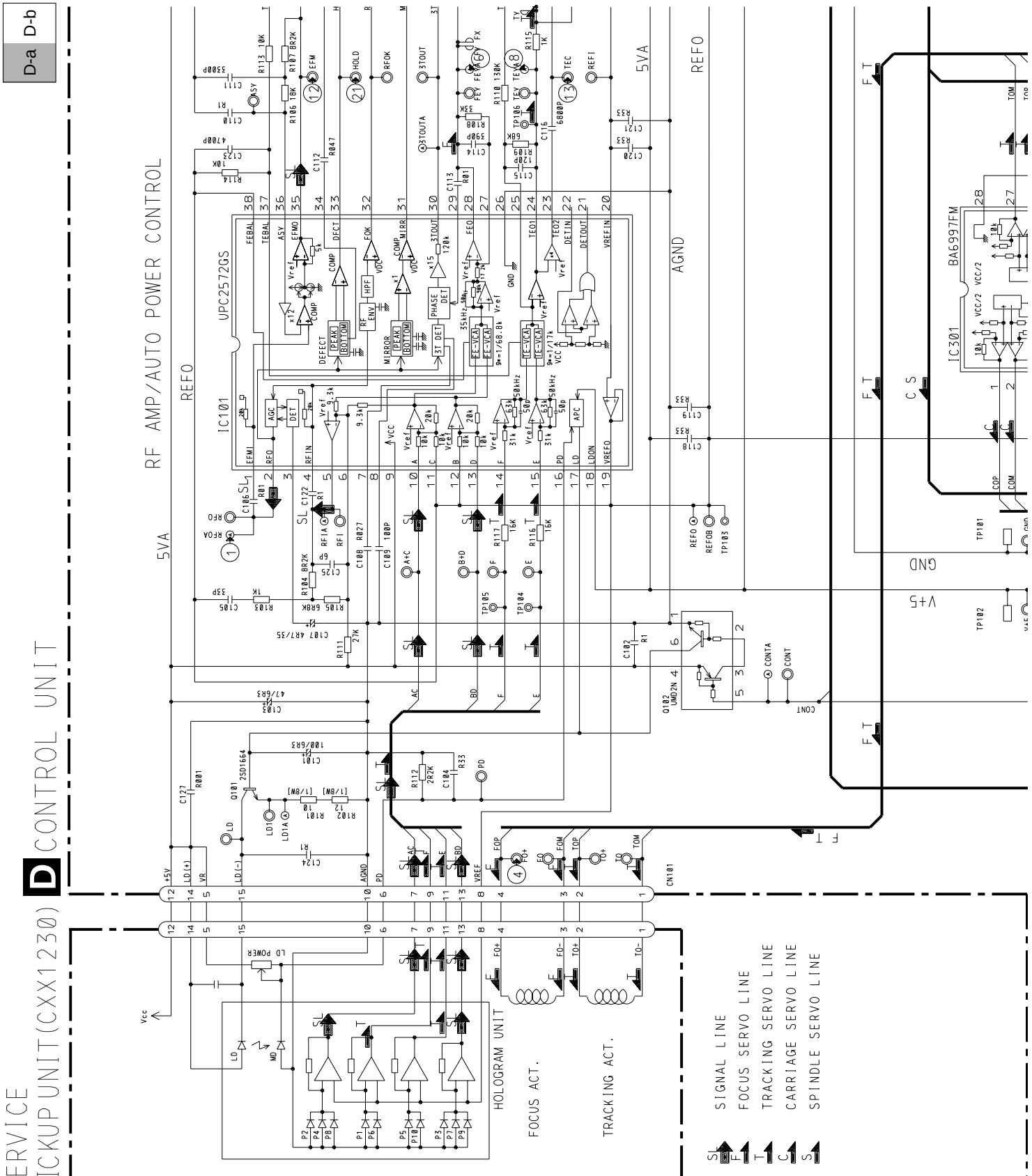
D-a
D-b
RF AMP/AUTO POWER CONTROL
UPC2572GS
IC101
BA6997FM
IC301
5VA
REFO
AGND
GND
V+5
CONTROL UNIT
SERVICE
PICKUP UNIT(CXX1230)
HOLOGRAM UNIT
FOCUS ACT.
TRACKING ACT.
SIGNAL LINE
FOCUS SERVO LINE
TRACKING SERVO LINE
CARRIAGE SERVO LINE
SPINDLE SERVO LINE

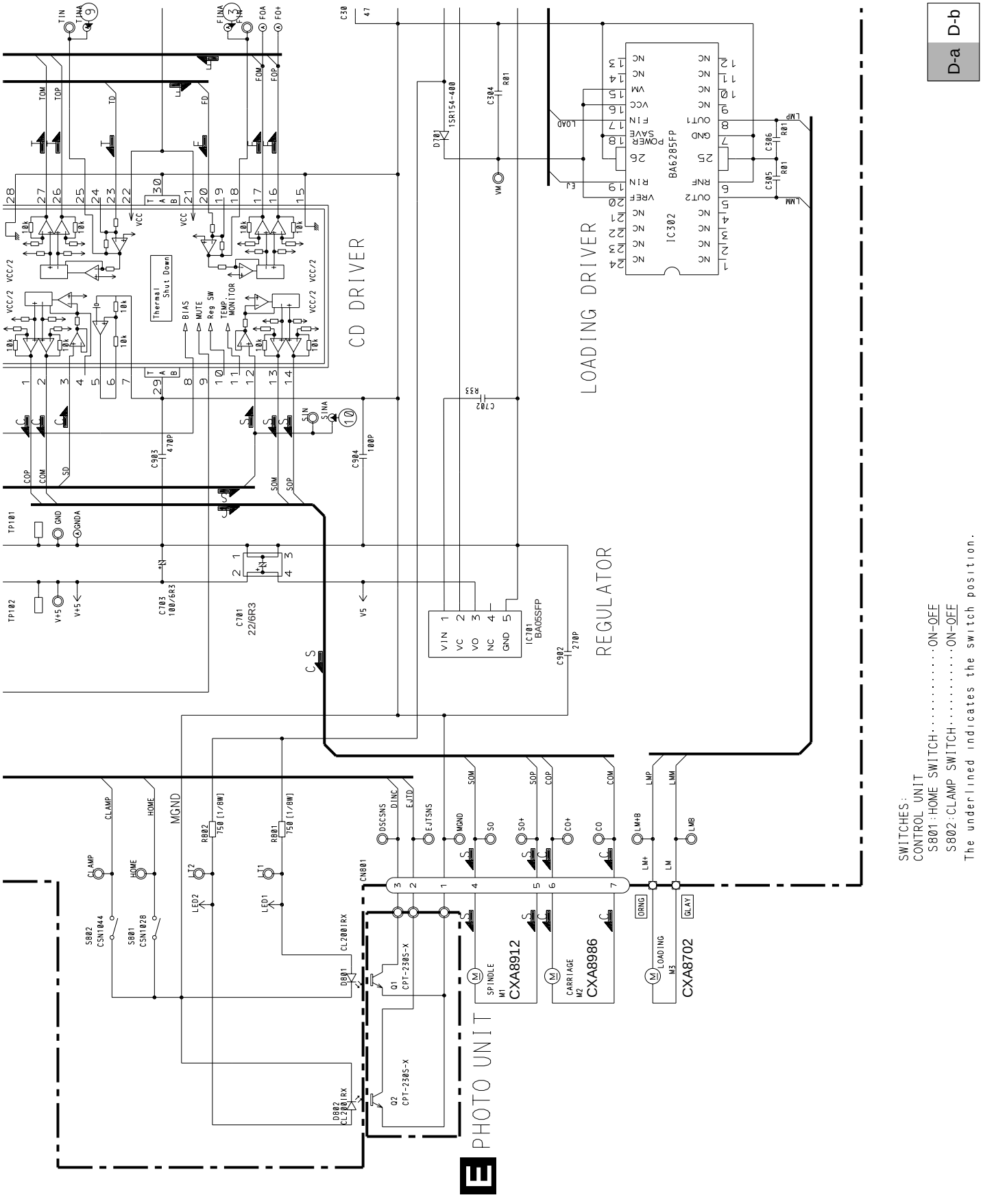
CD DRIVER
LOADING DRIVER
REGULATOR
PHOTO UNIT
SWITCHES:
CONTROL UNIT
S801:HOME SWITCH·····ON-OFF
S802:CLAMP SWITCH·····ON-OFF
The underlined indicates the switch position.

Fig. 11

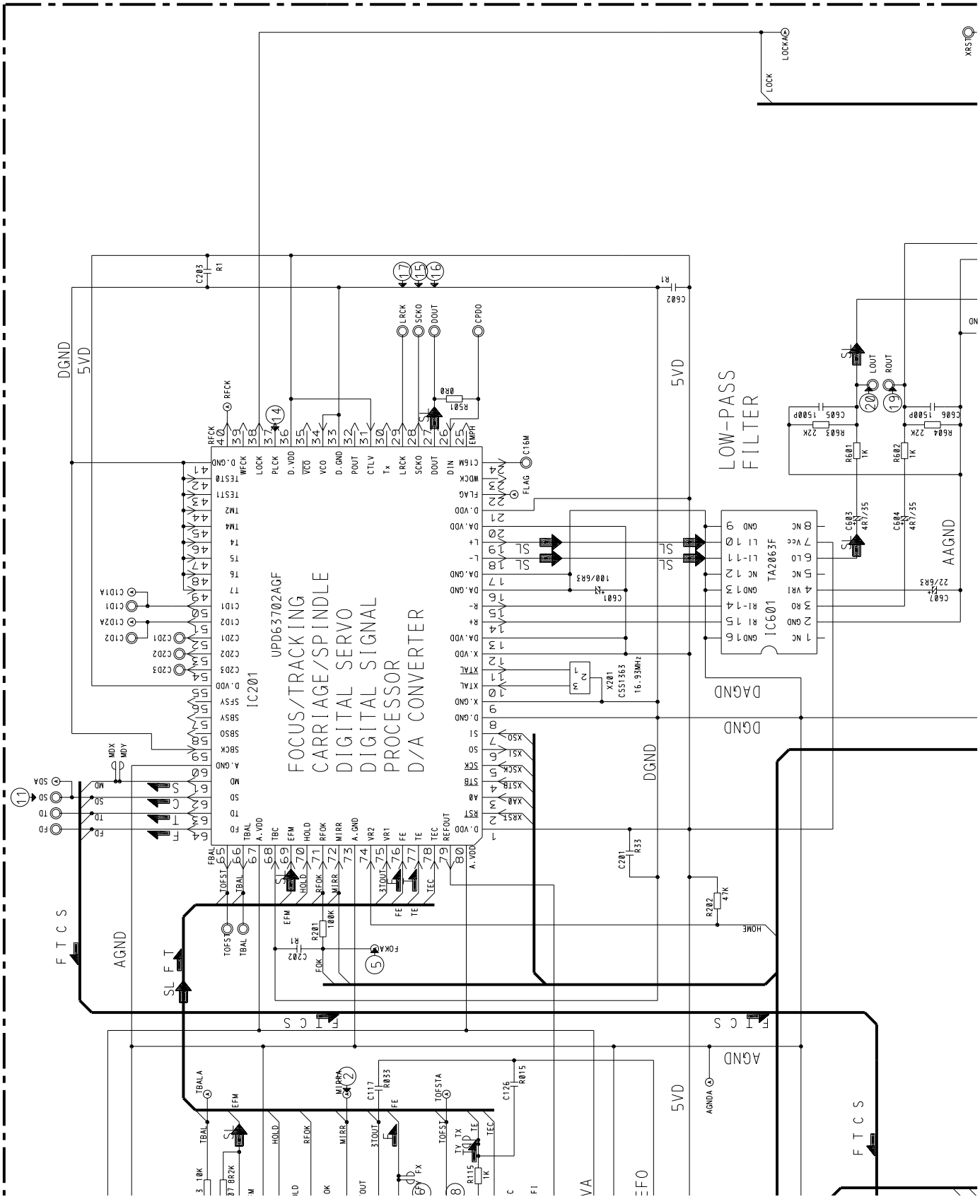
IC201
UPD63702AGF
FOCUS/TRACKING
CARRIAGE/SPINDLE
DIGITAL SERVO
DIGITAL SIGNAL
PROCESSOR
D/A CONVERTER
IC601
TA2063F
LOW-PASS
FILTER
X201
CSS1363
16.93MHz
DGND
5VD
AGND
DAGND
AAGND
F T C S
SL F T
LOCK
XRST
LOCKA
RFCK
LRCK
SCKO
DOUT
CPDO
FLAG
EMPH
LOUT
ROUT
HOME
FOKA
AGNDA
MDX
MDY
SDA
SD
TD
FD
MD
TBALA
TOFSTA
MIRRA
TY TX
TE
TEC
FE
EFM
HOLD
RFOK
MIRR
3TOUT
TOFST
TBAL
R201
100K
R202
47K
R033
R015
R115
1K
C117
C126
C201
R33
C601
100/6R3
C603
4R7/35
C604
4R7/35
C607
22/6R3
R601
1K
R602
1K
R603
22K
R604
22K
C605
1500P
C606
1500P
R501
0R0
C203
R1
C202
R1
C16M

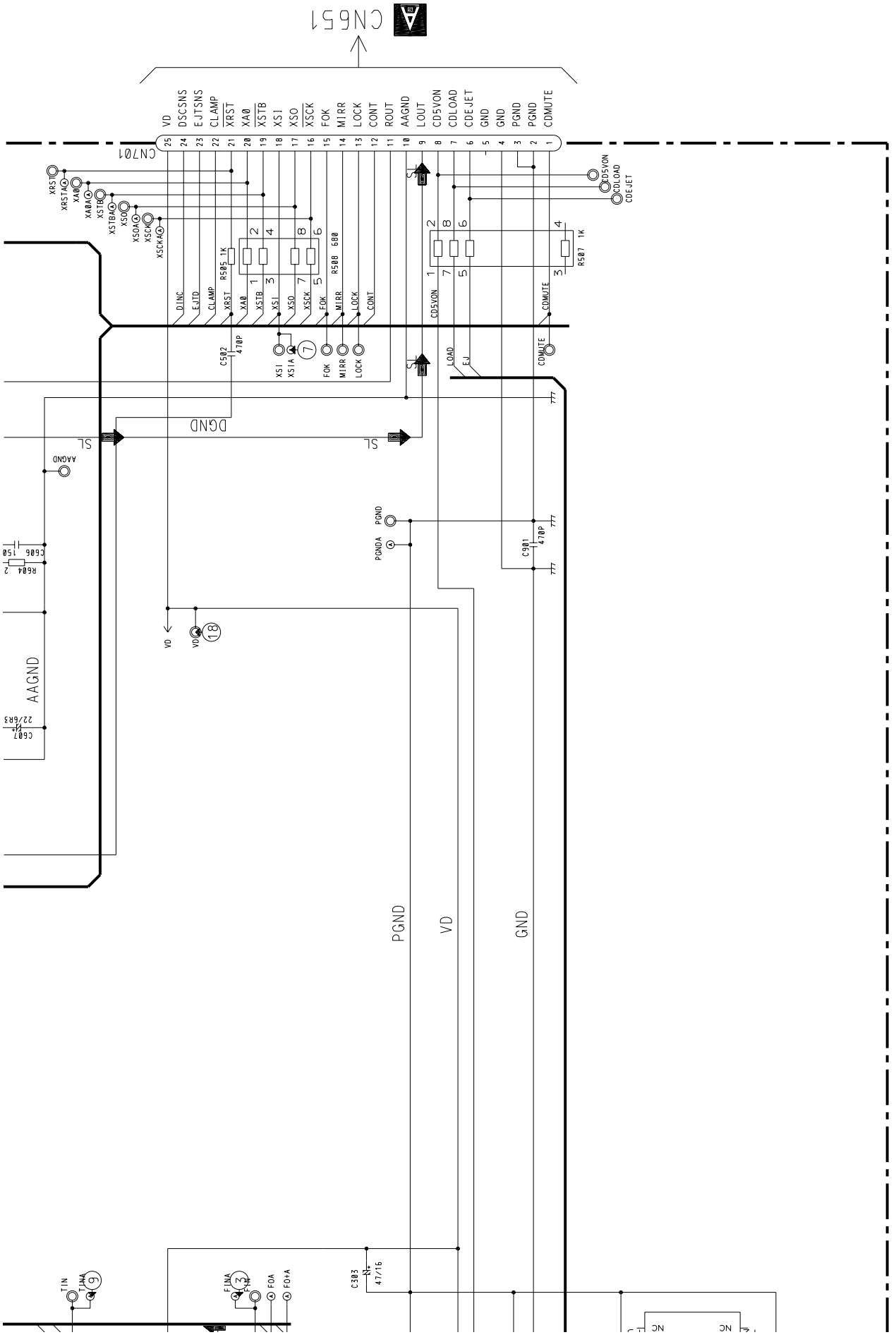
CN651
CN701
VD
DSCSNS
EJTSNS
CLAMP
XRST
XA0
XSTB
XSI
XSO
XSCK
FOK
MIRR
LOCK
CONT
ROUT
AAGND
LOUT
CD5VON
CDLOAD
CDEJET
GND
GND
PGND
PGND
CDMUTE
XRST
XA0
XSTB
XSI
XSO
XSCK
FOK
MIRR
LOCK
CONT
CD5VON
CDMUTE
R505 1K
R508 680
R507 1K
C502 470P
C901 470P
C606 150
C607 22/6R3
R604 2
DGND
SL
AAGND
PGND
PGNDA
VD
GND
LOAD
EJ
TIN
FINA
FOA
FO+A
C303 47/16

Fig. 12

Note:1. The encircled numbers denote measuring pointes in the circuit diagram.
2. Reference voltage
REFO:2.5V

● Waveforms

① RFO 0.5V/div. 0.5µs/div.
Normal mode: play

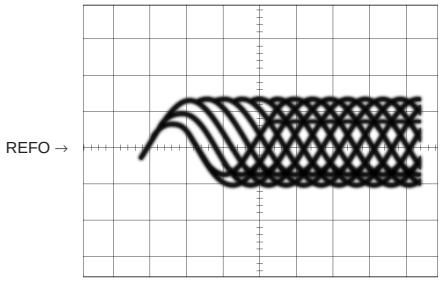

① CH1: RFO 1V/div. 0.5ms/div.
② CH2: MIRR 5V/div.
Test mode: Tracking open

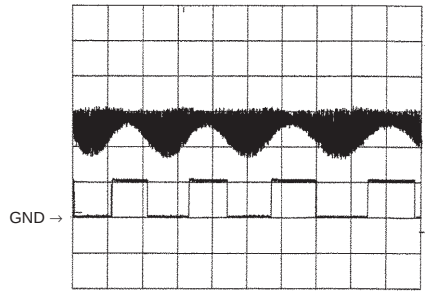

① CH1: RFO 1V/div. 0.5ms/div.
② CH2: MIRR 5V/div.
Normal mode: The defect part passes 800µm

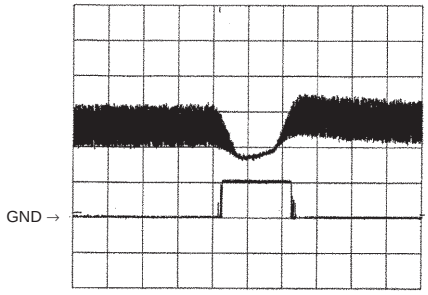

③ CH1: FIN 0.5V/div. 0.2s/div.
④ CH2: FO+ 2V/div.
Test mode: No disc, Focus close

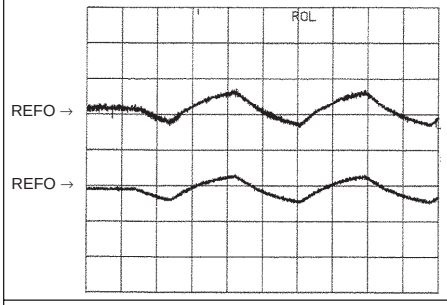

③ CH1: FIN 0.5V/div. 0.2s/div.
⑤ CH2: FOK 2V/div.
Normal mode: Focus close

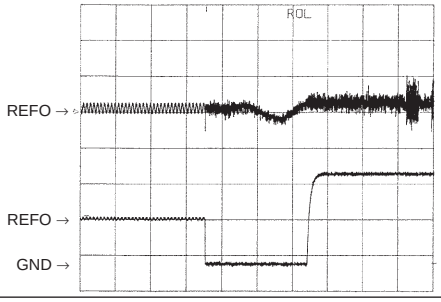

⑥ CH1: FEY 0.5V/div. 1ms/div.
⑦ CH2: XSI 2V/div.
Normal mode: Focus close

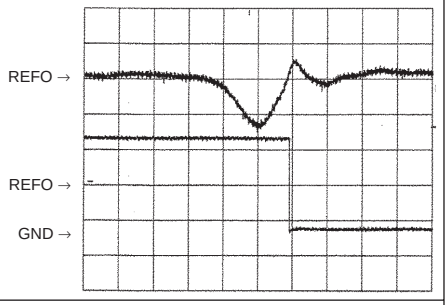

⑧ CH1: TEY 0.5V/div. 0.5ms/div.
⑨ CH2: TIN 0.5V/div.
Test mode: 32 tracks jump (FWD)

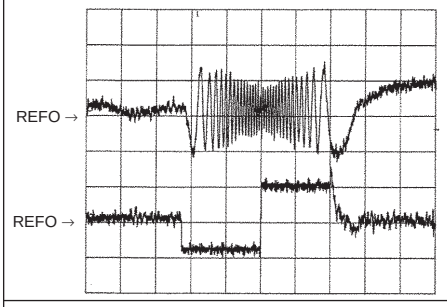

⑧ CH1: TEY 0.5V/div. 0.5ms/div.
⑨ CH2: TIN 0.5V/div.
Test mode: Single jump (FWD)

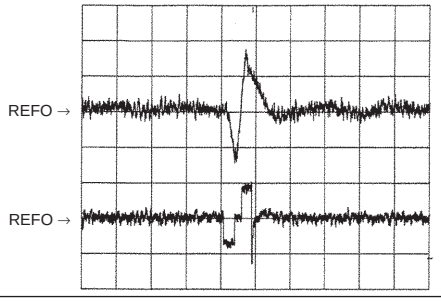

⑧ CH1: TEY 0.5V/div. 5ms/div.
⑨ CH2: TIN 0.5V/div.
Test mode: 100 tracks jump (FWD)

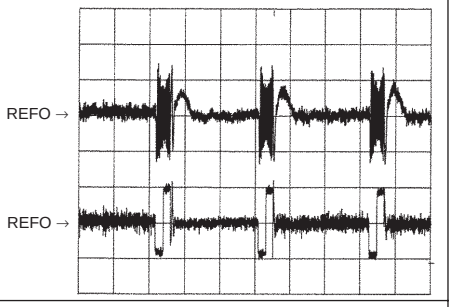

⑥ CH1: FEY 0.1V/div. 20ms/div.
③ CH2: FIN 0.2V/div.
Normal mode: Play

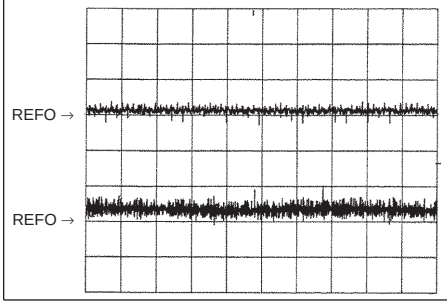

③ CH1: FIN 0.5V/div. 0.5s/div.
⑩ CH2: SIN 1V/div.
Normal mode: Focus close (12cm)

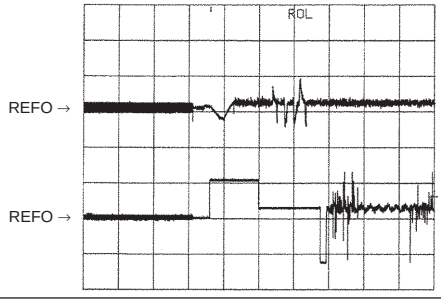

③ CH1: FIN 0.5V/div. 0.5s/div.
⑩ CH2: SIN 1V/div.
Normal mode: Focus close (8cm)

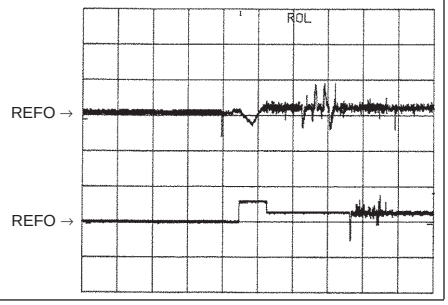

⑧ CH1: TEY 0.2V/div. 20ms/div.
⑨ CH2: TIN 0.2V/div.
Normal mode: play

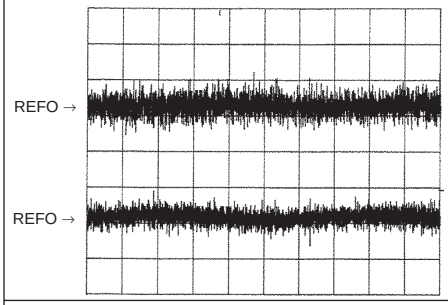

⑧ CH1: TEY 0.5V/div. 5ms/div.
⑪ CH2: SD 0.5V/div.

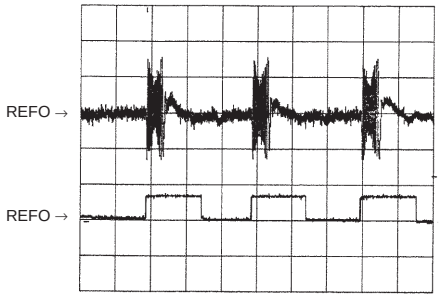

⑩ SIN 0.5V/div. 0.1s/div.

Normal mode: Play (12cm)

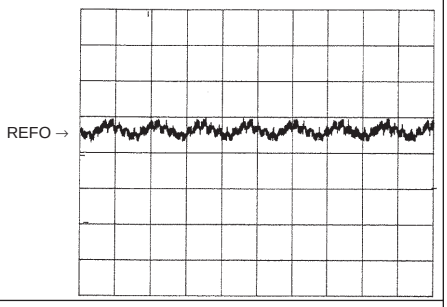

⑩ SIN 0.5V/div. 10ms/div.

Long Search (12cm)

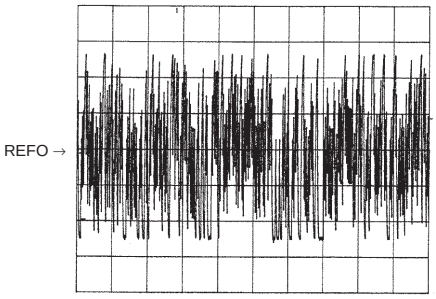

⑫ EFM 1V/div. 5µs/div.

Play

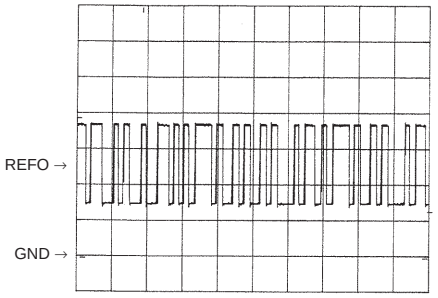

⑧ CH1: TEY 1V/div. 2ms/div.
⑬ CH2: TEC 1V/div.
Test mode: Focus close
Tracking open

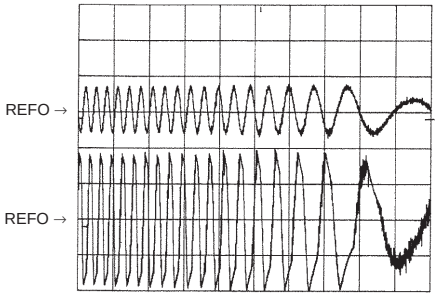

⑧ CH1: TEY 0.5V/div. 0.2s/div.
⑥ CH2: FEY 0.5V/div.
Normal mode: AGC after focus close

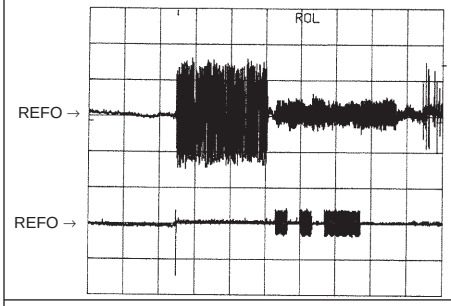

⑭ PLCK 2V/div. 0.5µs/div.

Play

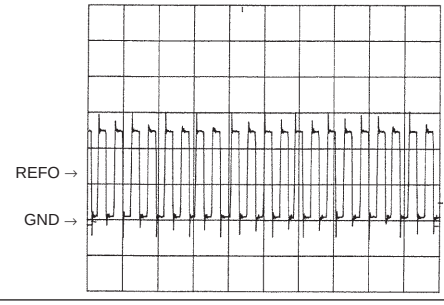

⑮ SCKO 2V/div. 1µs/div.

Play

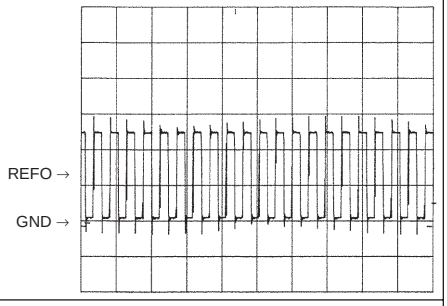

⑯ Dout 2V/div. 10µs/div.

Play

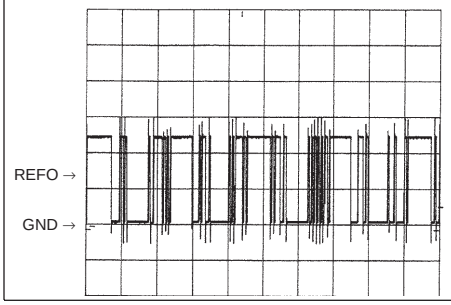

⑰ LRCK 2V/div. 20µs/div.

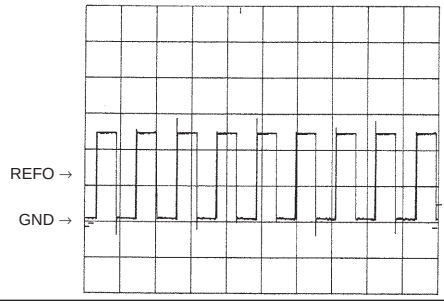

⑱ VD 5V/div. 50ms/div.

Normal mode: No disc

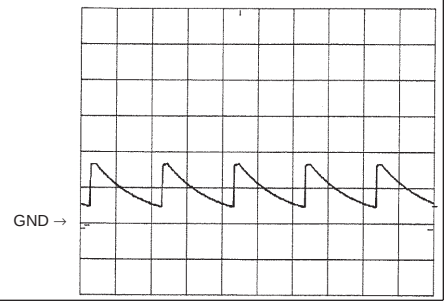

⑲ CH1: R OUT 1V/div.
⑳ CH2: L OUT 1V/div.
0.2ms/div.
Normal mode: Play (1kHz 0dB)

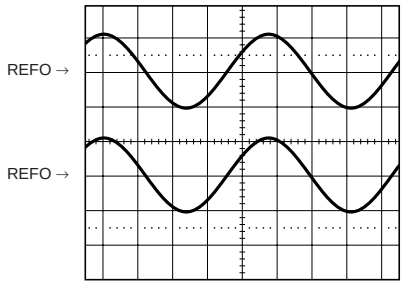

⑥ CH1: FEY 0.2V/div.
③ CH2: FIN 0.5V/div.
1ms/div.
Normal mode: During AGC

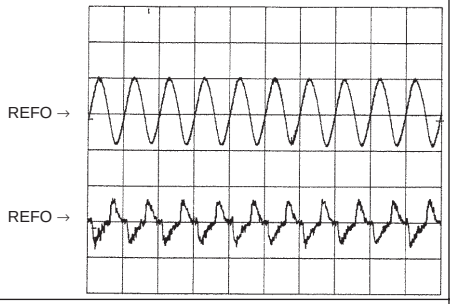

⑧ CH1: TEY 0.2V/div.
⑨ CH2: TIN 0.5V/div.
1ms/div.
Normal mode: During AGC

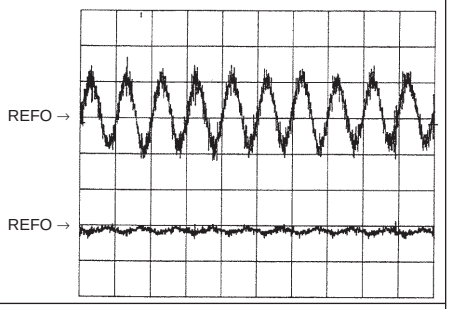

① CH1: RFO 1V/div.
㉑ CH2: HOLD 5V/div.
0.5ms/div.
Normal mode: The defect part passes 800µm

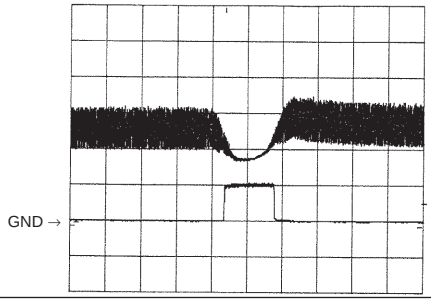

③ CH1: FIN 1V/div.
㉑ CH2: HOLD 5V/div.
0.5ms/div.
Normal mode: The defect part passes 800µm

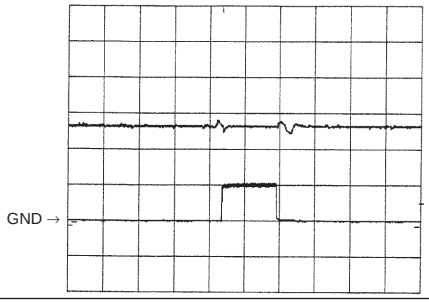

3.4 FM/AM TUNER UNIT

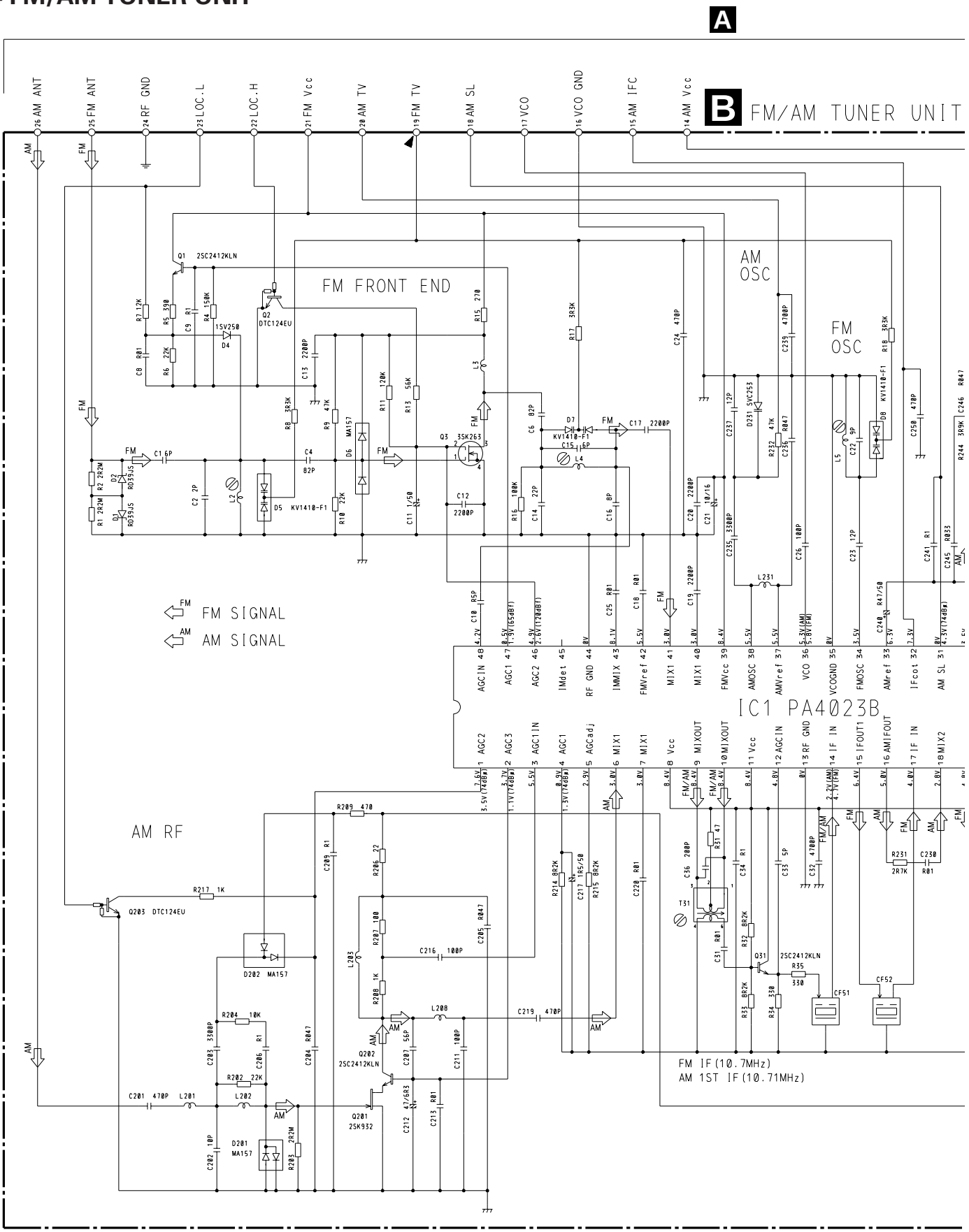

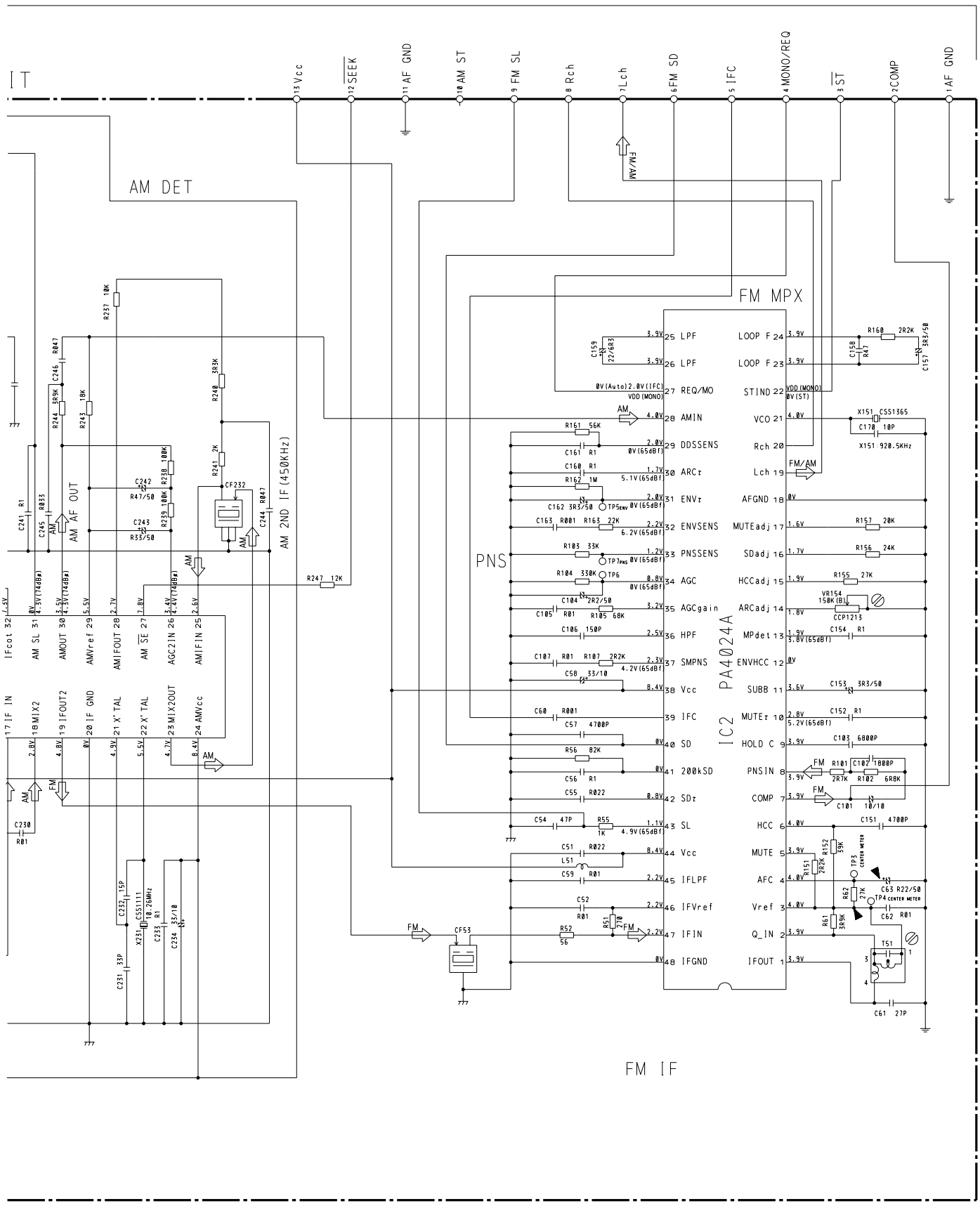
AM DET
FM MPX
PNS
IC2 PA4024A
FM IF
AM AF OUT
AM 2ND IF (450KHz)
13 Vcc
12 SEEK
11 AF GND
10 AM ST
9 FM SL
8 Rch
7 Lch
6 FM SD
5 IFC
4 MONO/REQ
3 ST
2 COMP
1 AF GND
25 LPF
26 LPF
27 REQ/MO
28 AMIN
29 DDSSENS
30 ARCτ
31 ENVτ
32 ENVSENS
33 PNSSENS
34 AGC
35 AGCgain
36 HPF
37 SMPNS
38 Vcc
39 IFC
40 SD
41 200kSD
42 SDτ
43 SL
44 Vcc
45 IFLPF
46 IFVref
47 IFIN
48 IFGND
LOOP F 24
LOOP F 23
STIND 22
VCO 21
Rch 20
Lch 19
AFGND 18
MUTEadj 17
SDadj 16
HCCadj 15
ARCadj 14
MPdet 13
ENVHCC 12
SUBB 11
MUTEτ 10
HOLD C 9
PNSIN 8
COMP 7
HCC 6
MUTE 5
AFC 4
Vref 3
Q_IN 2
IFOUT 1
X151 CSS1365
X151:920.5KHz
IFcot 32
AM SL 31
AMOUT 30
AMVref 29
AMIFOUT 28
AM SE 27
AGC2IN 26
AMIFIN 25
17 IF IN
18 MIX2
19 IFOUT2
20 IF GND
21 X'TAL
22 X'TAL
23 MIX2OUT
24 AMVcc
CF232
CF53
T51
TP3 CENTER METER
TP4 CENTER METER

Fig. 13

3.5 KEYBOARD PCB

● **DEH-P645/UC**

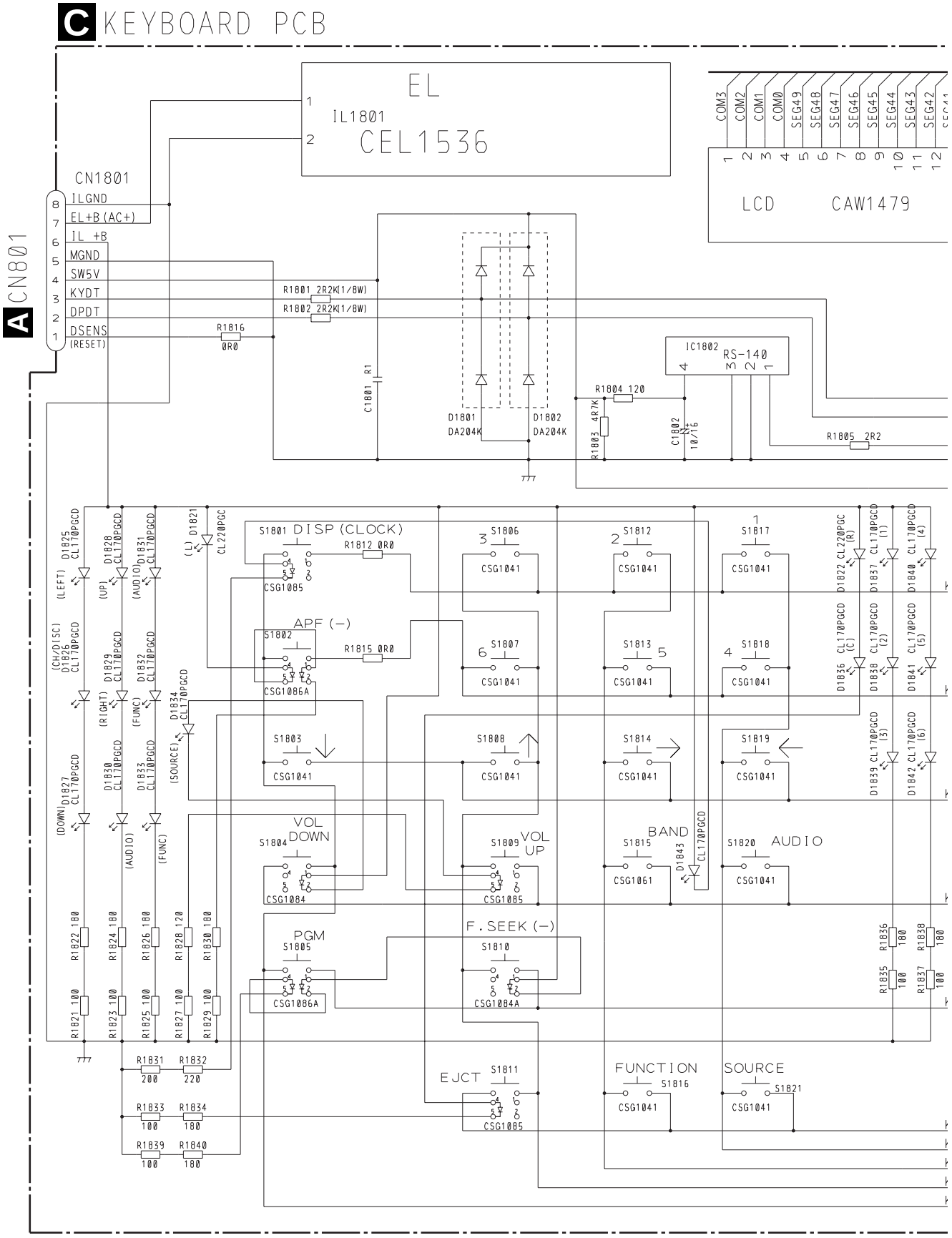

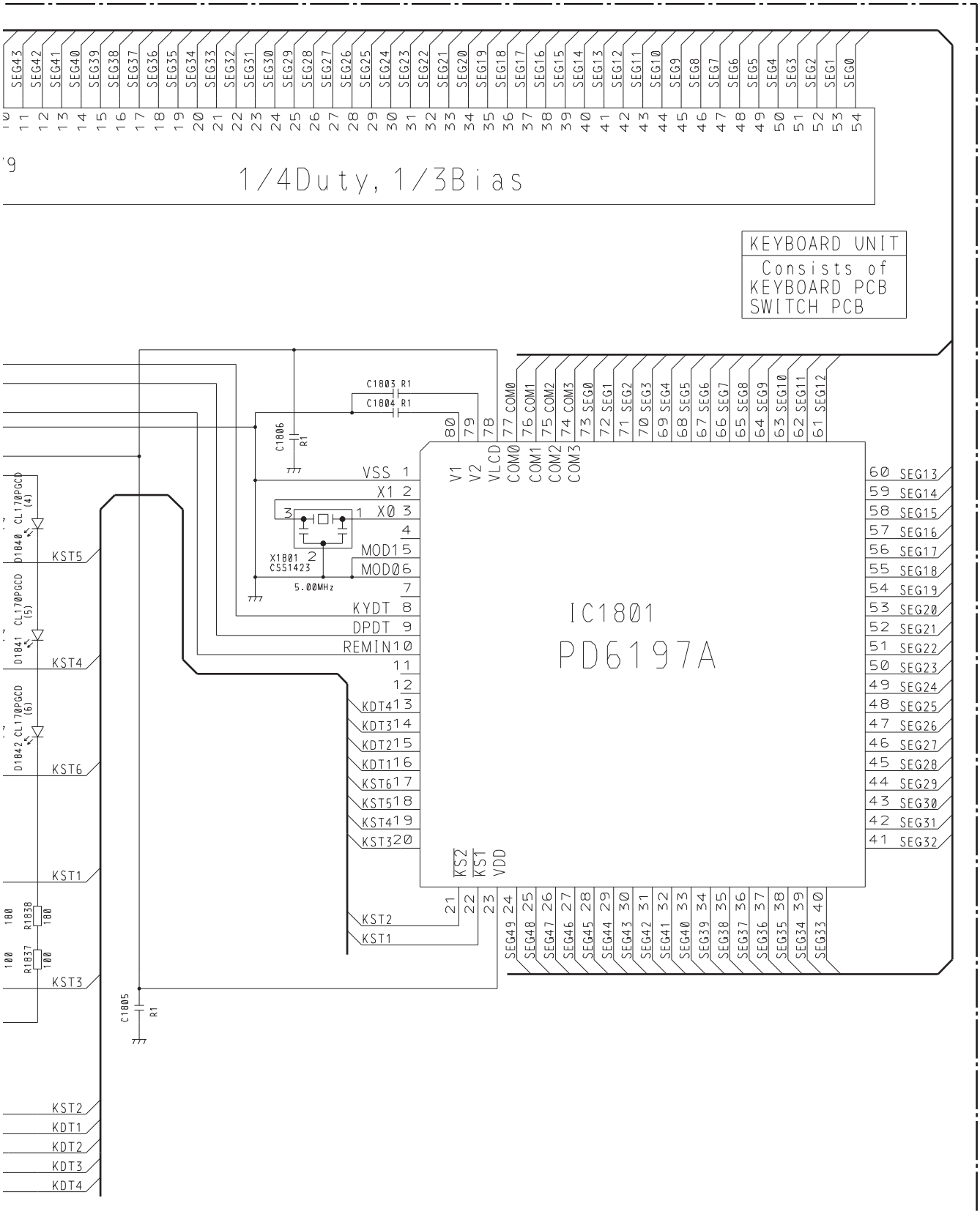
1/4Duty, 1/3Bias
KEYBOARD UNIT
Consists of
KEYBOARD PCB
SWITCH PCB
IC1801
PD6197A
X1801
CSS1423
5.00MHz
C1803 R1
C1804 R1
C1806 R1
C1805 R1
D1840 CL170PGCD (4)
D1841 CL170PGCD (5)
D1842 CL170PGCD (6)
R1838 180
R1837 100
KST5
KST4
KST6
KST1
KST3
KST2
KDT1
KDT2
KDT3
KDT4
VSS
X1
X0
MOD15
MOD06
KYDT
DPDT
REMIN
KDT4
KDT3
KDT2
KDT1
KST6
KST5
KST4
KST3
KST2
KST1
VDD
V1
V2
VLCD
COM0
COM1
COM2
COM3
SEG0
SEG1
SEG2
SEG3
SEG4
SEG5
SEG6
SEG7
SEG8
SEG9
SEG10
SEG11
SEG12
SEG13
SEG14
SEG15
SEG16
SEG17
SEG18
SEG19
SEG20
SEG21
SEG22
SEG23
SEG24
SEG25
SEG26
SEG27
SEG28
SEG29
SEG30
SEG31
SEG32
SEG33
SEG34
SEG35
SEG36
SEG37
SEG38
SEG39
SEG40
SEG41
SEG42
SEG43
SEG44
SEG45
SEG46
SEG47
SEG48
SEG49

Fig. 14

3.6 KEYBOARD PCB

● **DEH-P56/UC,DEH-P545/UC,DEH-46/UC,DEH-445/UC,DEH-41/UC**

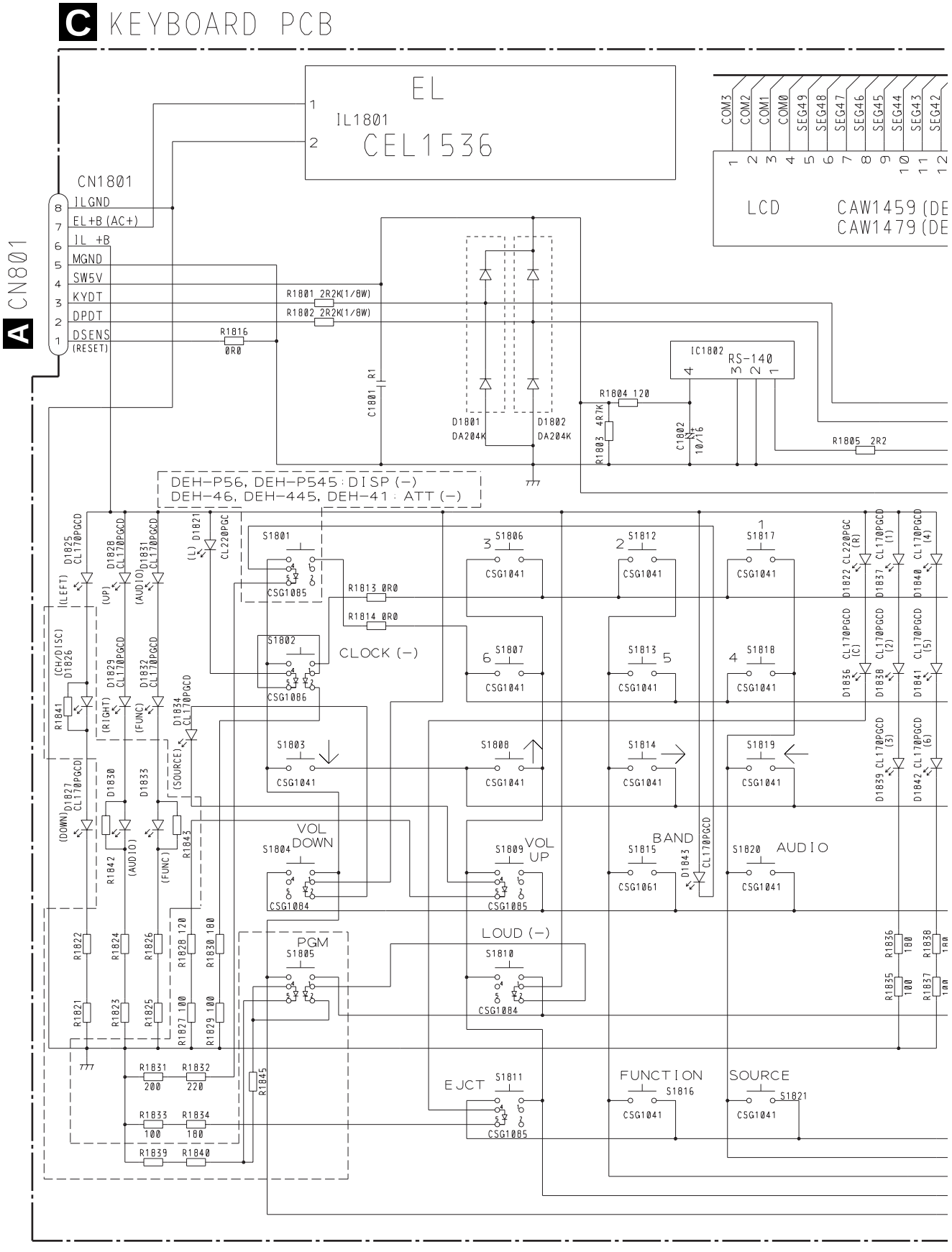

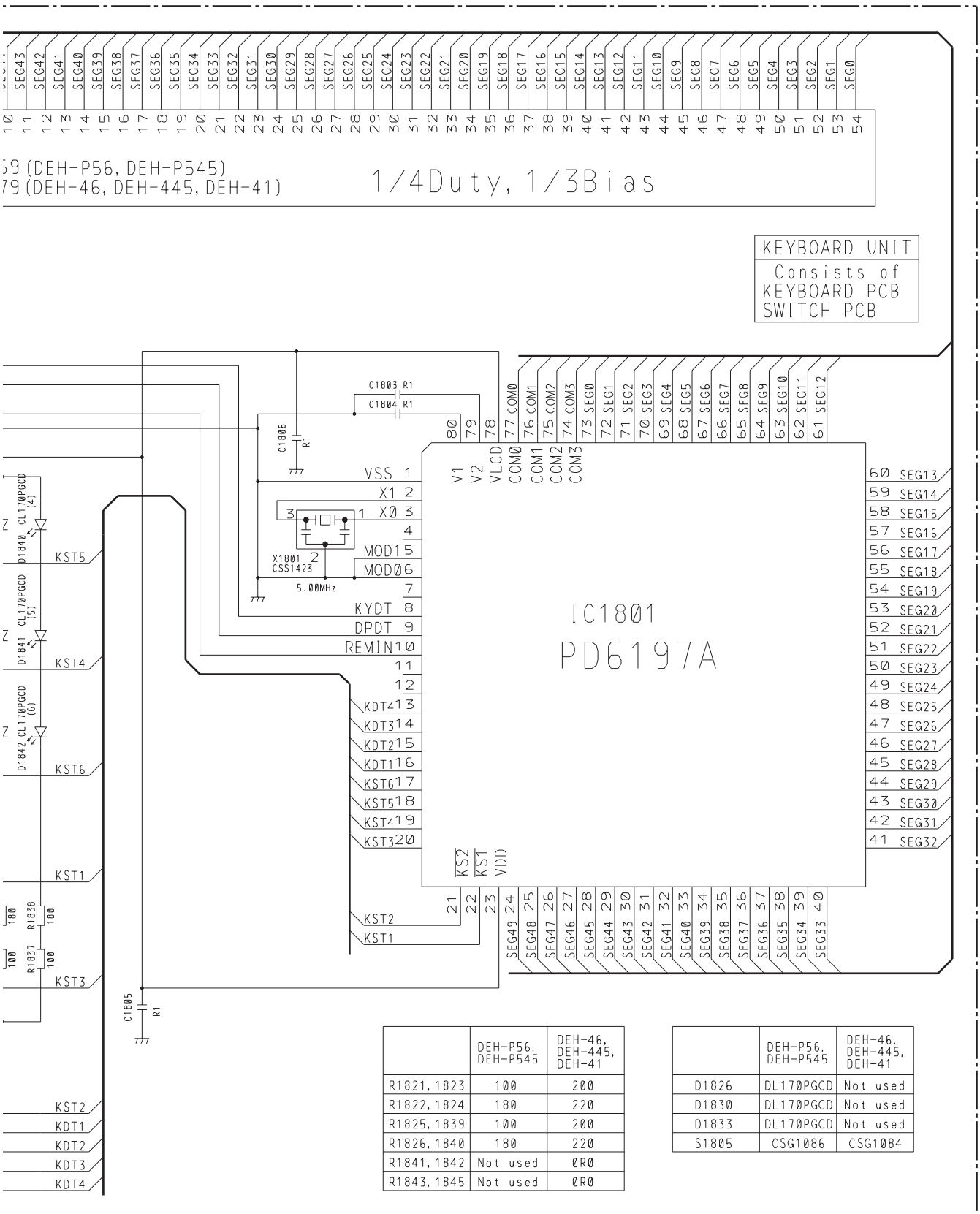

	DEH-P56, DEH-P545	DEH-46, DEH-445, DEH-41
R1821, 1823	100	200
R1822, 1824	180	220
R1825, 1839	100	200
R1826, 1840	180	220
R1841, 1842	Not used	0R0
R1843, 1845	Not used	0R0

	DEH-P56, DEH-P545	DEH-46, DEH-445, DEH-41
D1826	DL170PGCD	Not used
D1830	DL170PGCD	Not used
D1833	DL170PGCD	Not used
S1805	CSG1086	CSG1084

Fig. 15

4. PCB CONNECTION DIAGRAM

4.1 TUNER AMP UNIT

NOTE FOR PCB DIAGRAMS

1. The parts mounted on this PCB include all necessary parts for several destination.
   For further information for respective destinations, be sure to check with the schematic diagram.
2. Viewpoint of PCB diagrams

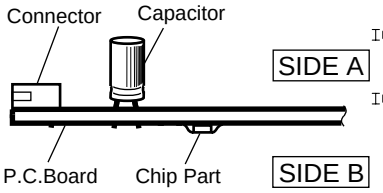

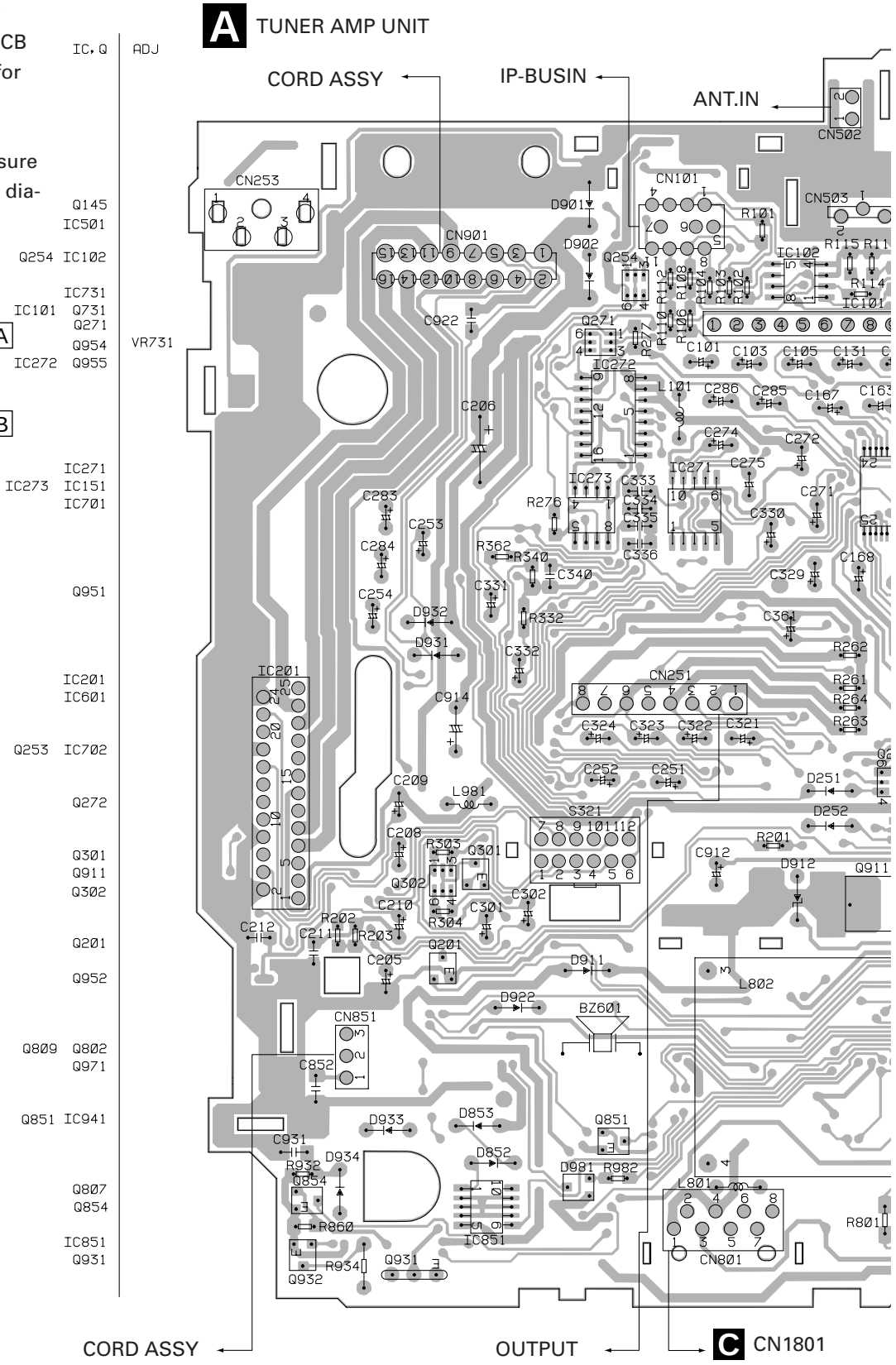

SIDE A

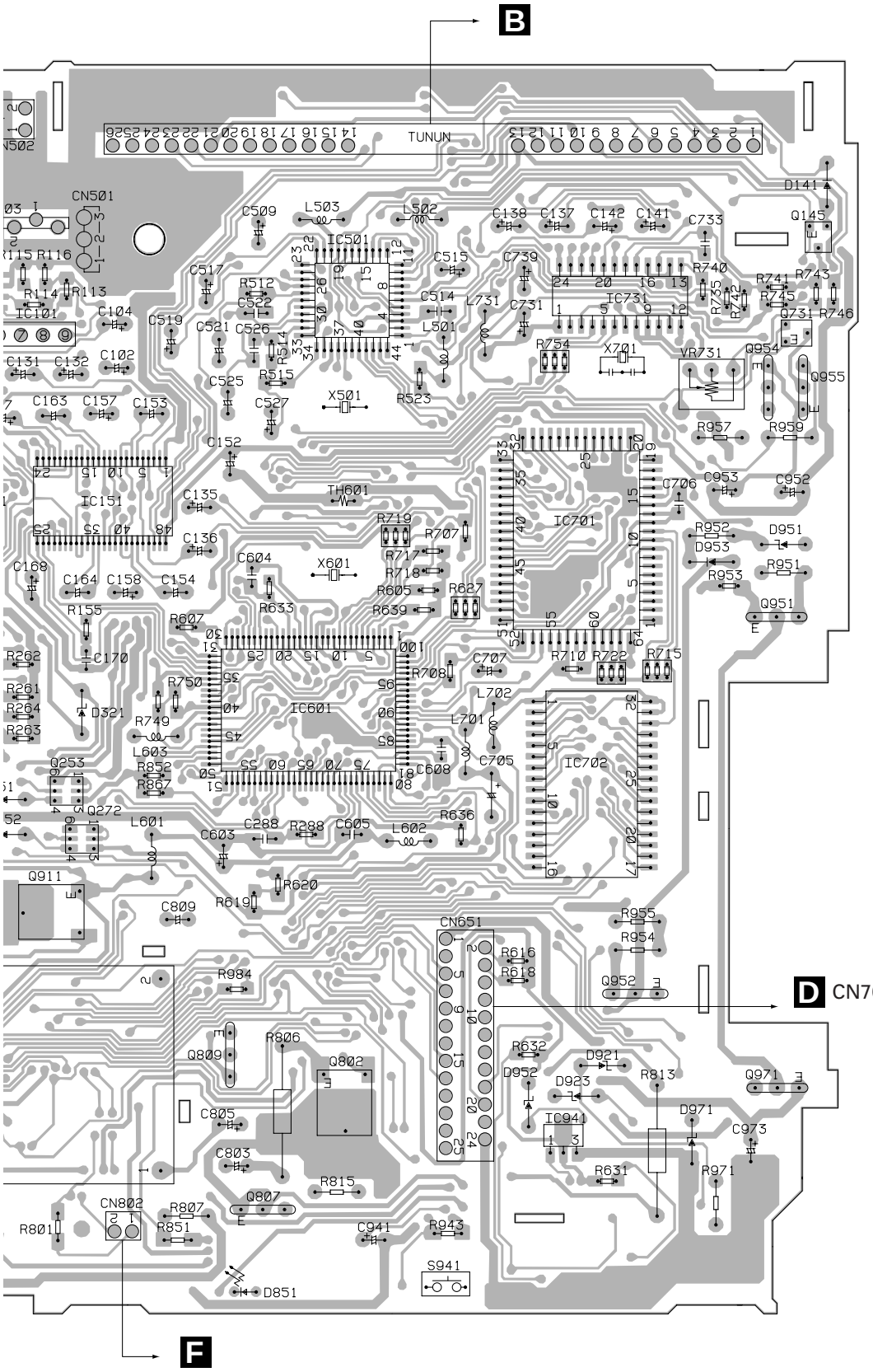
B
TUNUN
CN501
IC501
IC731
IC151
IC701
IC601
IC702
IC941
CN651
CN701
CN802
D
F
S941

Fig. 16

A TUNER AMP UNIT

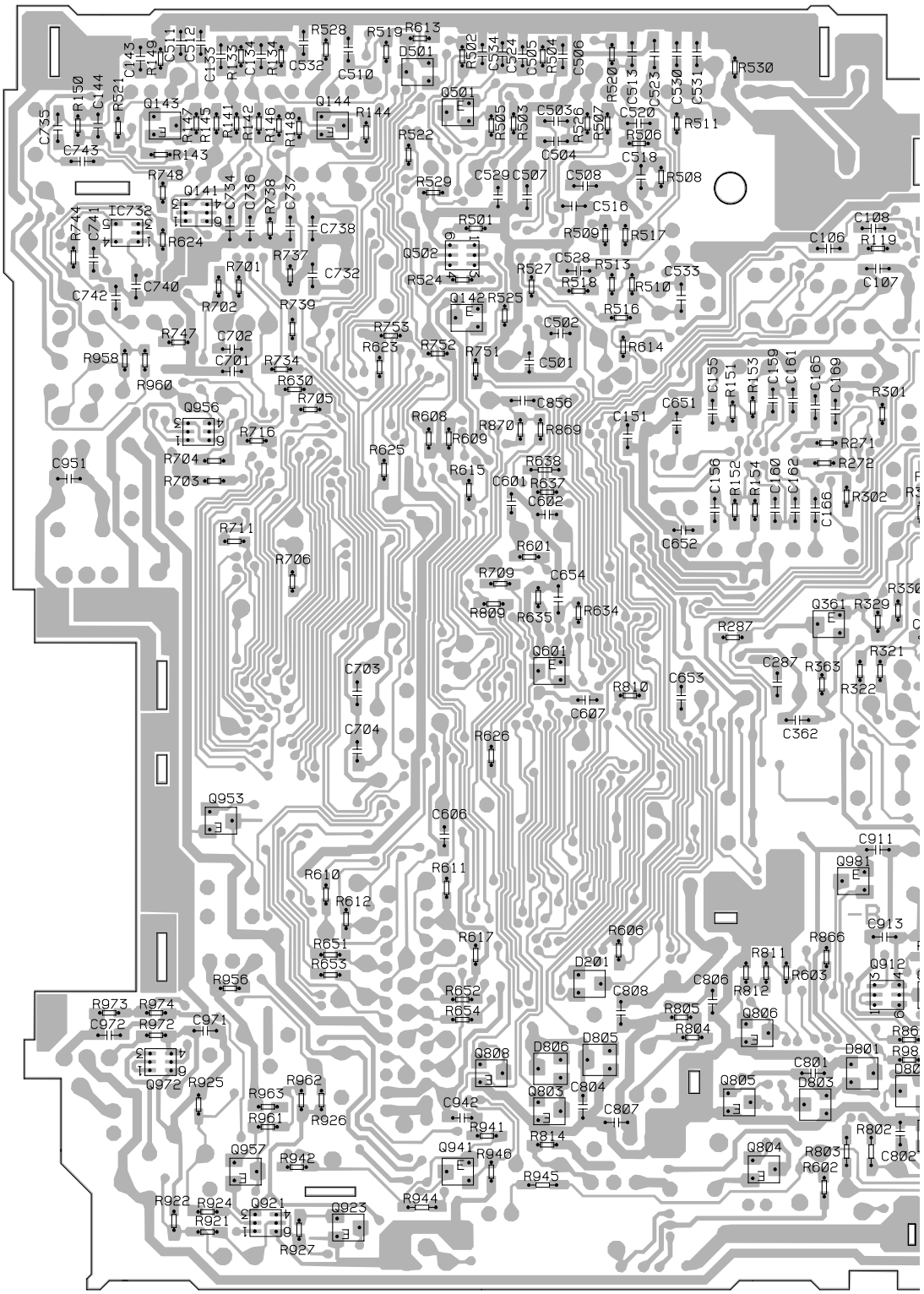

SIDE B

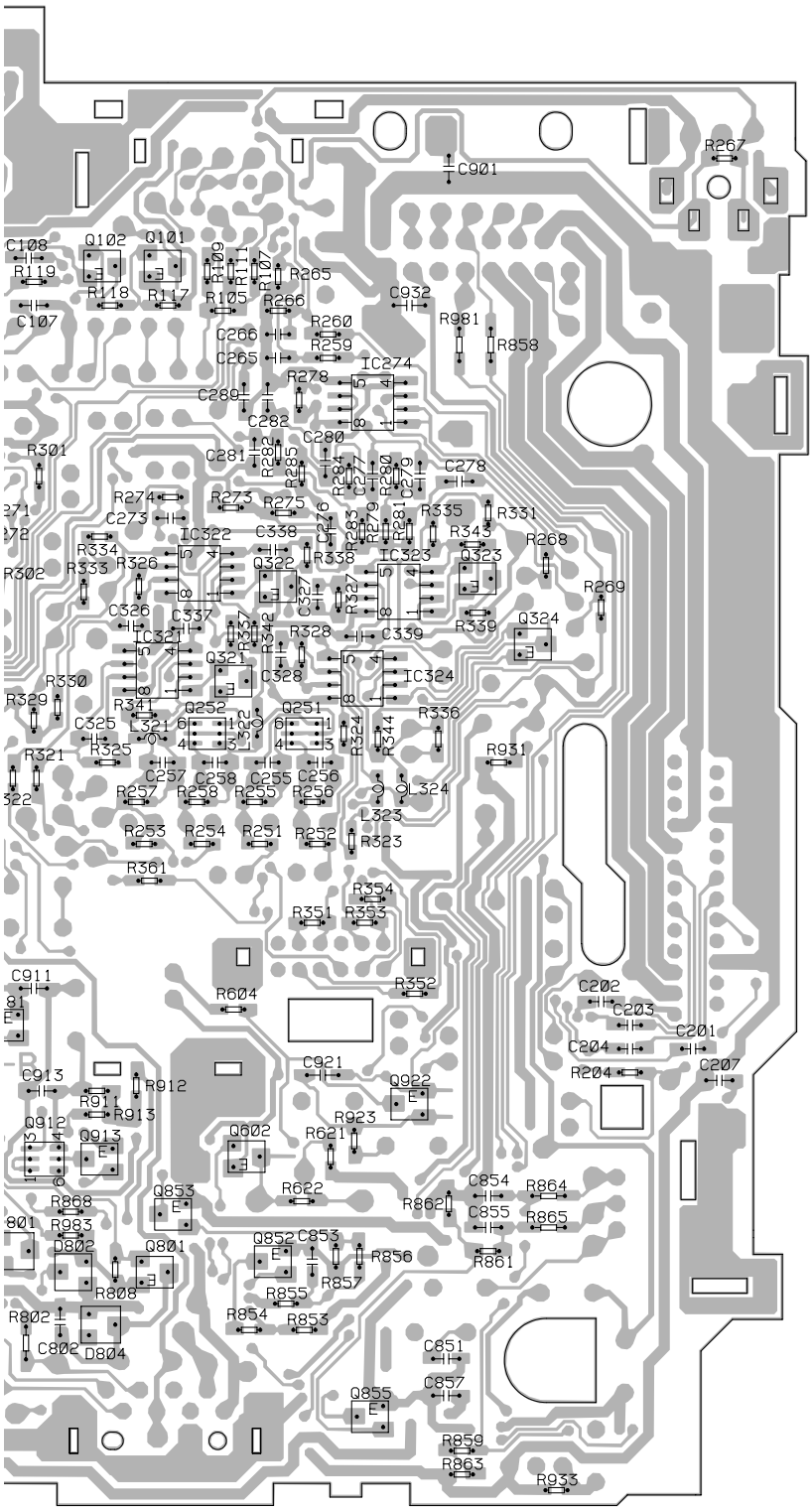

IC, Q

Q144 Q501
Q143

Q141

IC732 Q102
Q101
Q502

Q142

IC274

Q956

IC322
Q322 IC323
Q323

Q324
IC321
Q321 IC324

Q361 Q252
Q251
Q601

Q953

Q981

Q922

Q912 Q913
Q602
Q806
Q853

Q808 Q801 Q852
Q972 Q805
Q803

Q957 Q941
Q804
Q855
Q921 Q923

Q932

Fig. 17

4.2 FM/AM TUNER UNIT

SIDE A

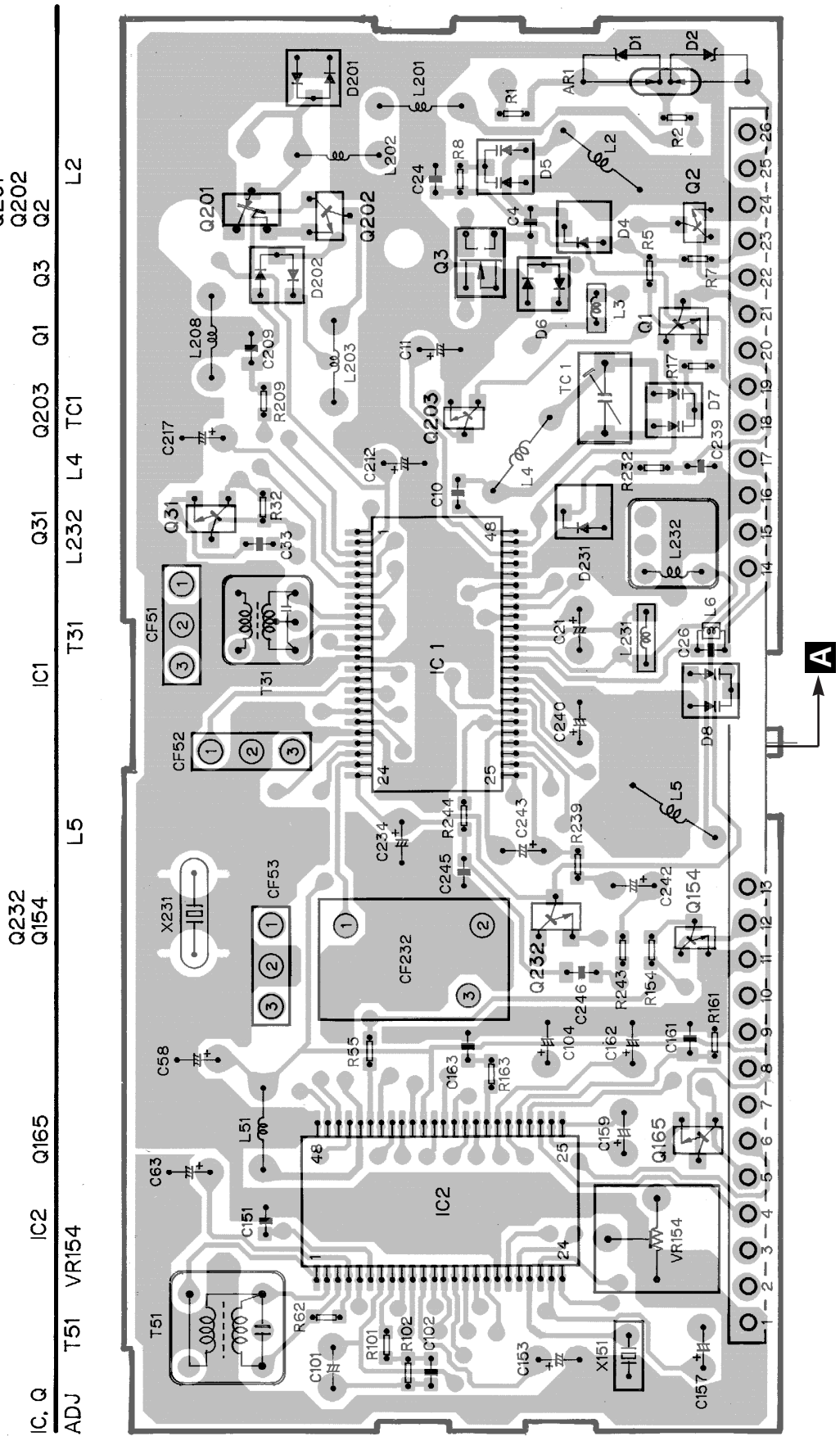

Fig. 18

SIDE B

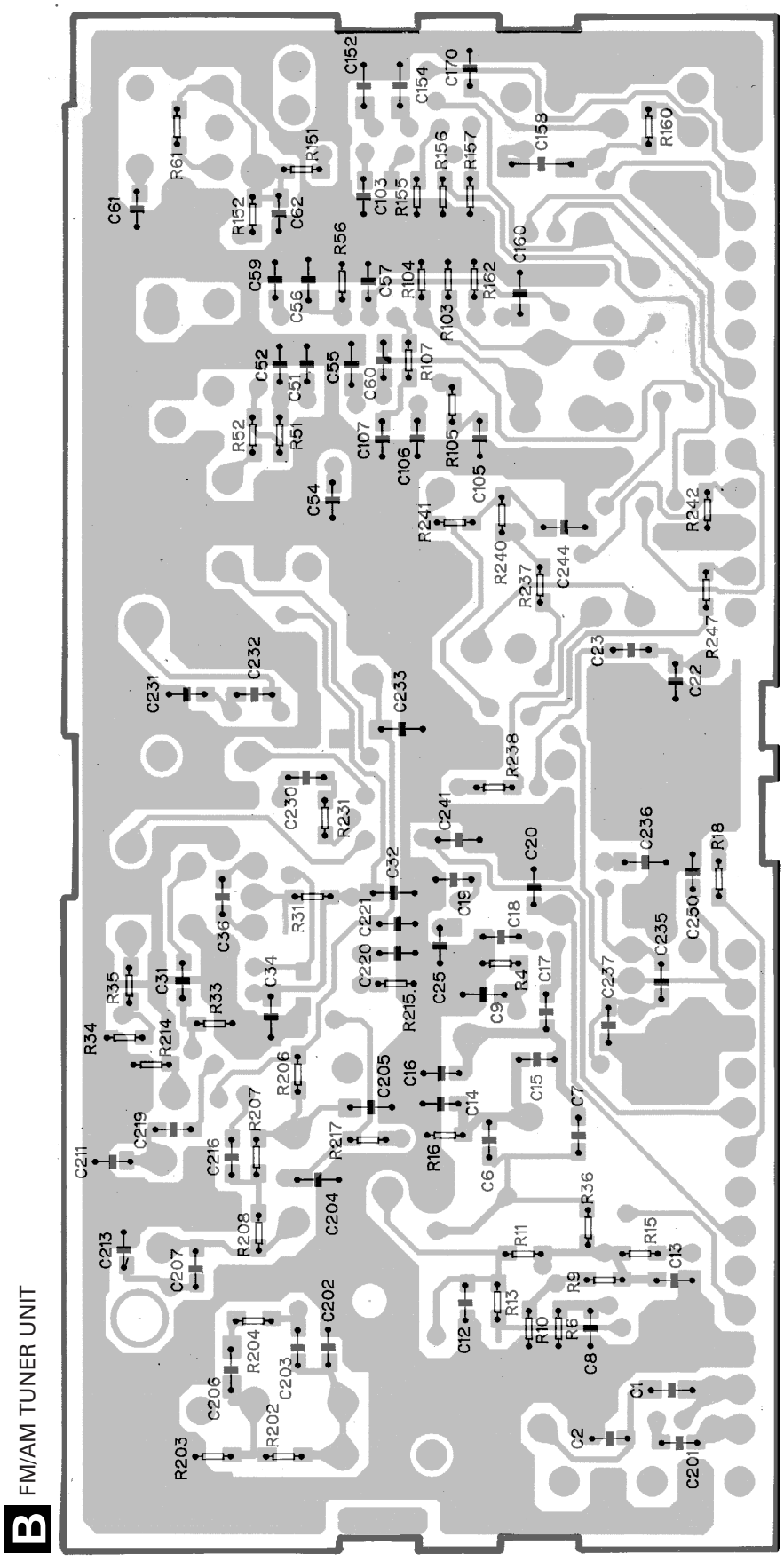

Fig. 19

4.3 CD MECHANISM MODULE

SIDE A

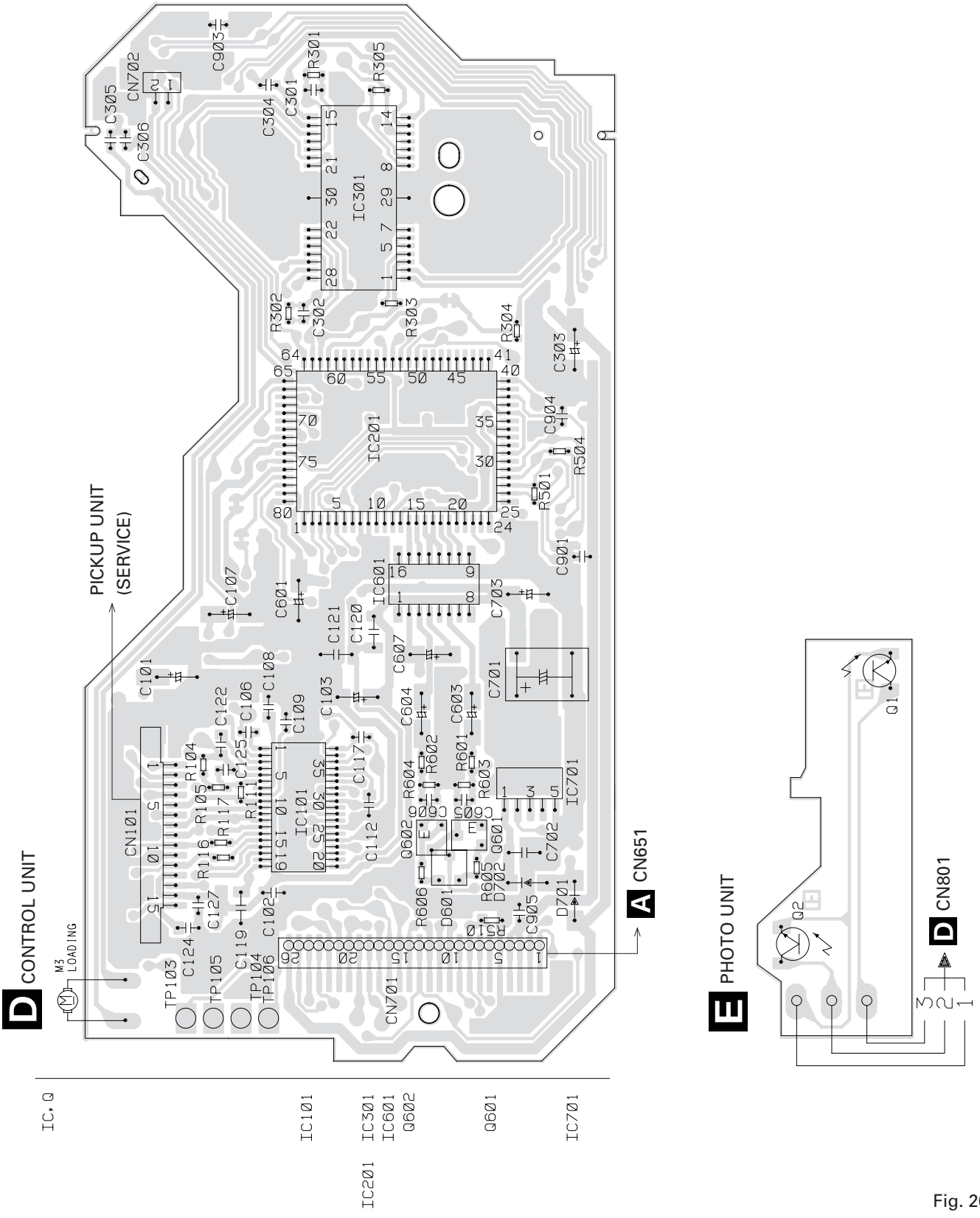

Fig. 20

SIDE B

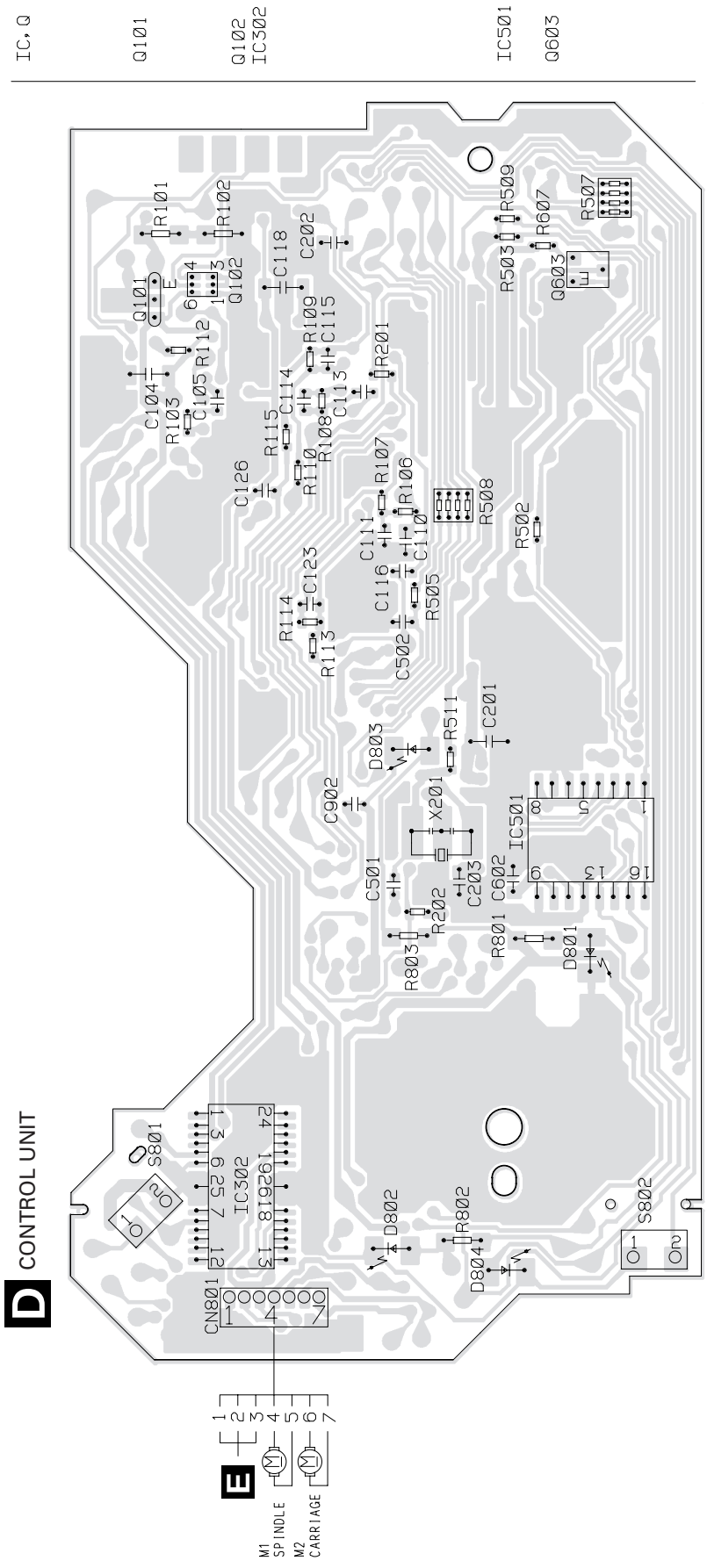
IC, Q
Q101
Q102
IC302
IC501
Q603
D
CONTROL UNIT
E
M1
SPINDLE
M2
CARRIAGE
CN801
IC302
IC501
X201
S801
S802
R101
R102
Q101
Q102
C118
C202
R509
R607
R507
R503
Q603
R112
R109
C115
R201
C104
R103
C105
C114
C113
R115
R108
R110
C126
R107
R106
R508
R502
C111
C110
C123
C116
R505
R114
R113
C502
R511
C201
D803
C902
C501
C203
C602
R202
R803
R801
D801
D802
R802
D804

Fig. 21

4.4 KEYBOARD PCB,SWITCH PCB

SIDE A

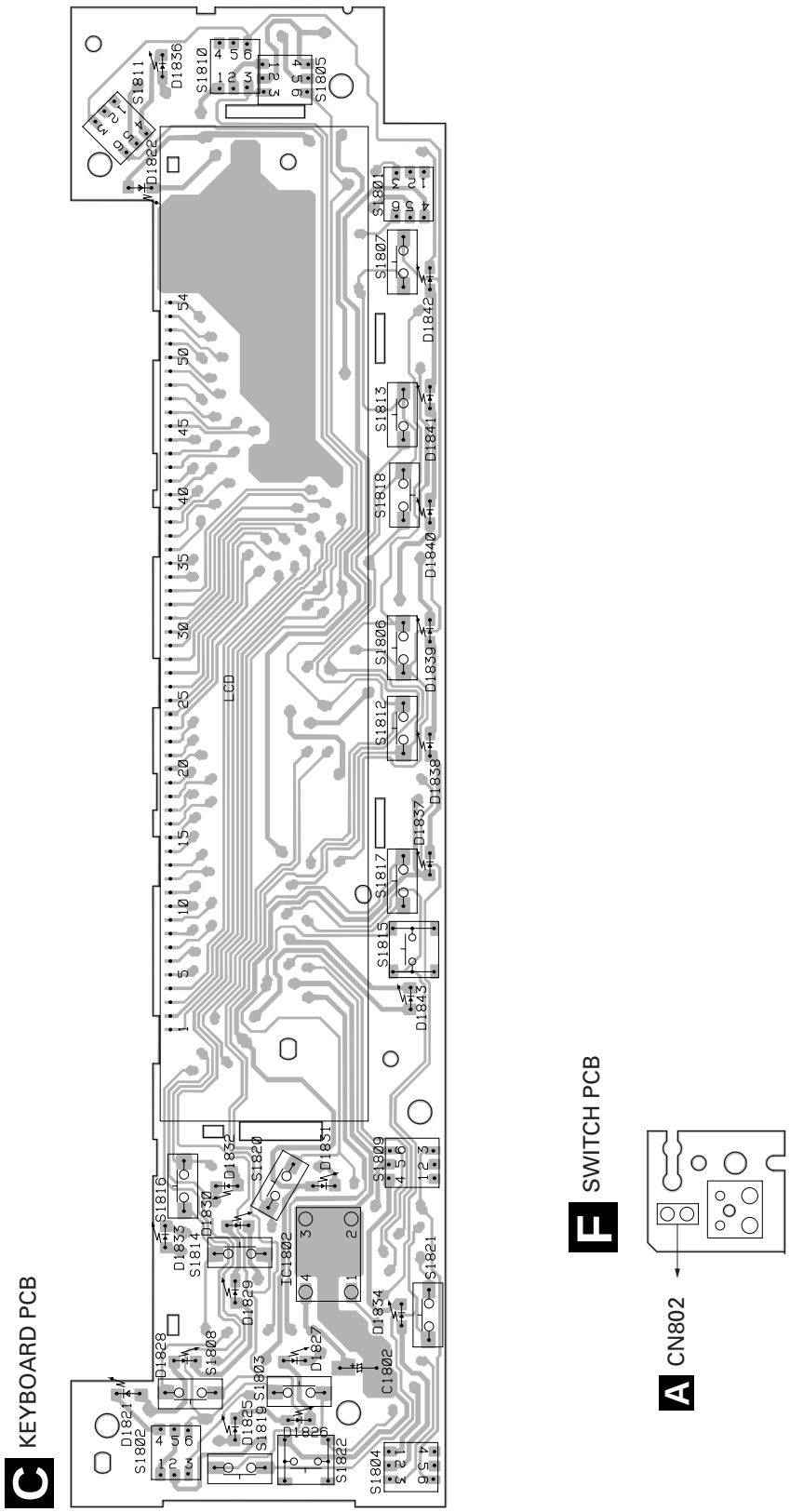

Fig. 22

SIDE B

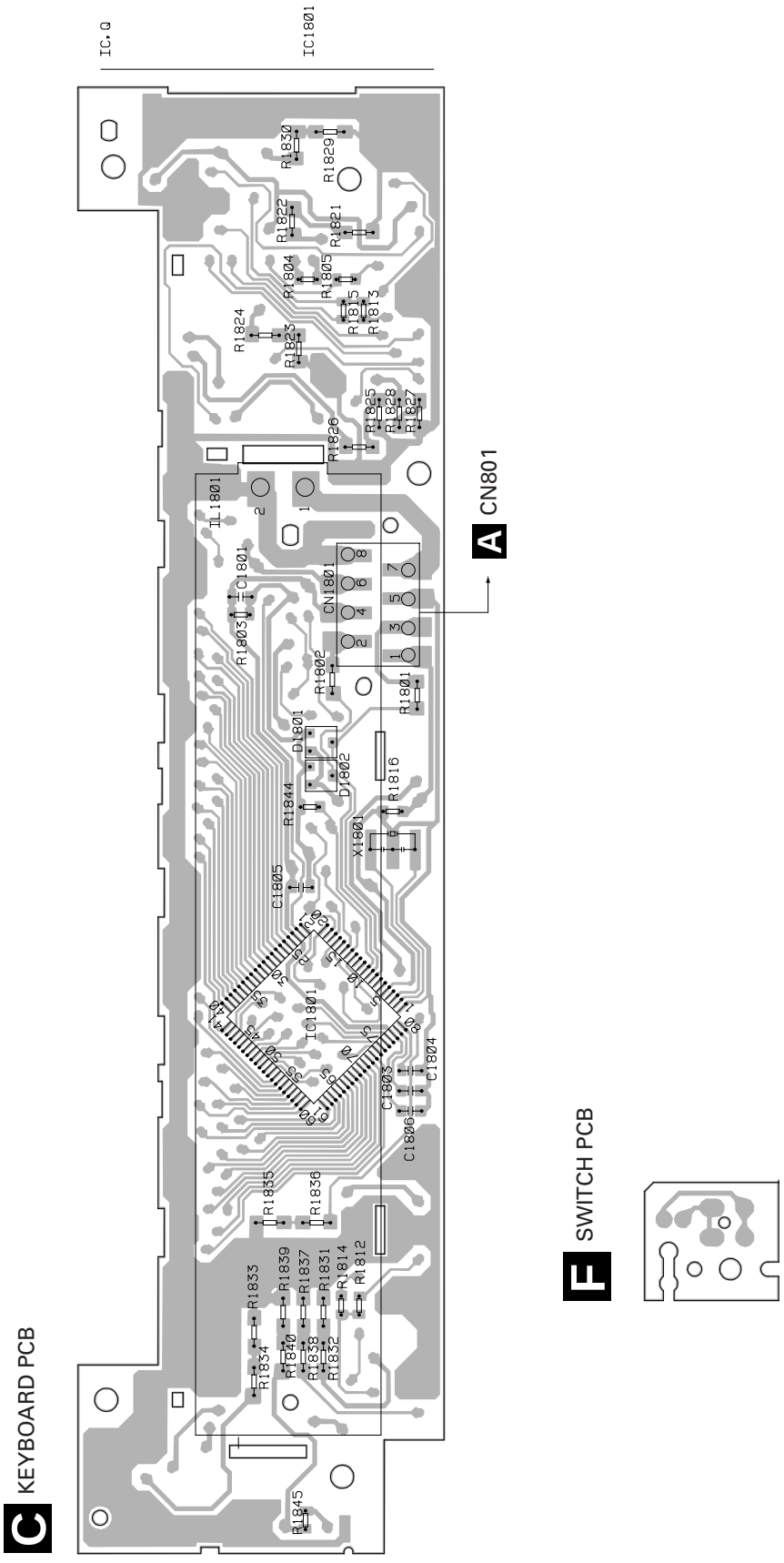

Fig. 23

5. ELECTRICAL PARTS LIST

NOTES:

- Parts whose parts numbers are omitted are subject to being not supplied.
- The part numbers shown below indicate chip components.

Chip Resistor

RS1/○S○○○J,RS1/○○S○○○J

Chip Capacitor (except for CQS.....)

CKS....., CCS....., CSZS.....

B Unit Number : CWE1417
Unit Name : FM/AM Tuner Unit

MISCELLANEOUS

=====Circuit Symbol and No.		===Part Name	Part No.
IC	1	IC	PA4023B
IC	2	IC	PA4024A
Q	1	Transistor	2SC2412KLN
Q	2	Transistor	DTC124EU
Q	3	FET	3SK263
Q	31	Transistor	2SC2412KLN
Q	201	FET	2SK932
Q	202	Transistor	2SC2412KLN
Q	203	Transistor	DTC124EU
D	1	Diode	RD39JS
D	2	Diode	RD39JS
D	4	Diode	1SV250
D	5	Diode	KV1410-F1
D	6	Diode	MA157
D	7	Diode	KV1410-F1
D	8	Diode	KV1410-F1
D	201	Diode	MA157
D	202	Diode	MA157
D	231	Diode	SVC253
L	2	Coil	CTC1108
L	3	Inductor	LCTB2R2K2125
L	4	Coil	CTC1108
L	5	Coil	CTC1107
L	51	Ferri-Inductor	LAU150K
L	201	Ferri-Inductor	LAU4R7K
L	202	Ferri-Inductor	LAU330K
L	203	Inductor	CTF1287
L	208	Inductor	LAU121K
L	231	Inductor	LCTA3R3J3225
T	31	Coil	CTE1116
T	51	Coil	CTC1136
CF	51	Ceramic Filter	CTF1290
CF	52	Ceramic Filter	CTF1290
CF	53	Ceramic Filter	CTF1290
CF	232	Ceramic Filter	CTF1348
X	151	Resonator 920.5kHz	CSS1365
X	231	Crystal Resonator 10.26MHz	CSS1111
VR	154	Semi-fixed 150kΩ(B)	CCP1213

RESISTORS

=====Circuit Symbol and No.		===Part Name	Part No.
R	1		RS1/16S225J
R	2		RS1/16S225J
R	4		RS1/16S154J
R	5		RS1/16S391J
R	6		RS1/16S223J
R	7		RS1/16S123J
R	8		RS1/16S332J
R	9		RS1/16S473J
R	10		RS1/16S223J
R	11		RS1/16S124J
R	13		RS1/16S563J
R	15		RS1/16S271J
R	16		RS1/16S104J
R	17		RS1/16S332J
R	18		RS1/16S332J
R	31		RS1/16S470J
R	32		RS1/16S822J
R	33		RS1/16S822J
R	34		RS1/16S331J
R	35		RS1/16S331J
R	51		RS1/16S271J
R	52		RS1/16S560J
R	55		RS1/16S102J
R	56		RS1/16S823J
R	61		RS1/16S392J
R	62		RS1/16S273J
R	101		RS1/16S272J
R	102		RS1/16S682J
R	103		RS1/16S333J
R	104		RS1/16S334J
R	105		RS1/16S683J
R	107		RS1/16S222J
R	151		RS1/16S222J
R	152		RS1/16S393J
R	155		RS1/16S273J
R	156		RS1/16S243J
R	157		RS1/16S203J
R	160		RS1/16S222J
R	161		RS1/16S563J
R	162		RS1/16S105J
R	163		RS1/16S223J
R	202		RS1/16S223J
R	203		RS1/16S225J
R	204		RS1/16S103J
R	206		RS1/16S220J
R	207		RS1/16S101J
R	208		RS1/16S102J
R	209		RS1/16S471J
R	214		RS1/16S822J
R	215		RS1/16S822J
R	217		RS1/16S102J
R	231		RS1/16S272J
R	232		RS1/16S473J
R	237		RS1/16S103J
R	238		RS1/16S104J
R	239		RS1/16S104J
R	240		RS1/16S332J
R	241		RS1/16S202J
R	243		RS1/16S183J
R	244		RS1/16S392J
R	247		RS1/16S123J

Circuit Symbol and No.		Part Name	Part No.
CAPACITORS			
C	1		CCSQCH6R0D50
C	2		CCSRCK2R0C50
C	4		CCSRCH820J50
C	6		CCSRCH820J50
C	8		CKSRYB103K25
C	9		CKSQYB104K16
C	10		CCSRCKR50C50
C	11		CEJA1R0M50
C	12		CKSRYB222K50
C	13		CKSRYB222K50
C	14		CCSRCH220J50
C	15		CCSRCH6R0D50
C	16		CCSRCH8R0D50
C	17		CKSRYB222K50
C	18		CKSRYB103K25
C	19		CKSRYB222K50
C	20		CKSRYB222K50
C	21		CEJA100M16
C	22		CCSRTH9R0D50
C	23		CCSRTH120J50
C	24		CCSRCH471J50
C	25		CKSRYB103K25
C	26		CCSRCH101J50
C	31		CKSRYB103K25
C	32		CKSQYB472K50
C	33		CCSRCH5R0C50
C	34		CKSQYB104K16
C	36		CCSRRH201J50
C	51		CKSRYB223K25
C	52		CKSRYB103K25
C	54		CCSRCH470J50
C	55		CKSQYB223K25
C	56		CKSQYB104K16
C	57		CKSRYB472K50
C	58		CEJA330M10
C	59		CKSRYB103K25
C	60		CKSRYB102K50
C	61		CCSRCH270J50
C	62		CKSRYB103K25
C	63		CEJAR22M50
C	101		CEJANP100M10
C	102		CKSRYB182K50
C	103		CKSRYB682K25
C	104		CEJA2R2M50
C	105		CKSRYB103K25
C	106		CCSRCH151J50
C	107		CKSRYB103K25
C	151		CKSRYB472K50
C	152		CKSQYB104K16
C	153		CEJA3R3M50
C	154		CKSQYB104K16
C	157		CEJA3R3M50
C	158		CKSYB474K16
C	159		CEJA220M6R3
C	160		CKSQYB104K16
C	161		CKSQYB104K16
C	162		CEJA3R3M50
C	163		CKSRYB102K50
C	170		CCSRCH100D50
C	201		CCSRCH471J50
C	202		CCSRCH100D50
C	203		CKSRYB332K50
C	204		CKSQYB473K16
C	205		CKSQYB473K16
C	206		CKSQYB104K16
C	207		CCSRCH560J50
C	209		CKSQYB104K16
C	211		CCSRCH101J50
C	212		CEJA470M6R3
C	213		CKSRYB103K25
C	216		CCSRCH101J50
C	217		CEJA1R5M50
C	219		CCSRCH471J50
C	220		CKSRYB103K25
C	230		CKSRYB103K25
C	231		CCSRCH330J50
C	232		CCSRCH150J50
C	233		CKSQYB104K16
C	234		CEJA330M10
C	235		CKSRYB332K50
C	236		CKSQYB473K16
C	237		CCSRCH120J50
C	239		CKSRYB472K50
C	240		CEJAR47M50
C	241		CKSQYB104K16
C	242		CEJAR47M50
C	243		CEJAR33M50
C	244		CKSQYB473K16
C	245		CKSRYB333K16
C	246		CKSQYB473K16
C	250		CCSRCH471J50

D Unit Number : CWX2224
Unit Name : Control Unit

MISCELLANEOUS			
IC	101	IC	UPC2572GS
IC	201	IC	UPD63702AGF
IC	301	IC	BA6997FM
IC	302	IC	BA6285FP
IC	601	IC	TA2063F
IC	701	IC	BA05SFP
Q	101	Transistor	2SD1664
Q	102	Transistor	UMD2N
D	701	Diode	1SR154-400
D	801		CL200IRX
D	802		CL200IRX
X	201	Ceramic Resonator 16.93MHz	CSS1363
S	801	Switch(Home)	CSN1028
S	802	Switch(Clamp)	CSN1044

RESISTORS			
R	101		RS1/8S100J
R	102		RS1/8S120J
R	103		RS1/16S102J
R	104		RS1/16S822J
R	105		RS1/16S682J
R	106		RS1/16S183J
R	107		RS1/16S822J
R	108		RS1/16S333J
R	109		RS1/16S683J
R	110		RS1/16S134J
R	111		RS1/16S273J
R	112		RS1/16S222J
R	113		RS1/16S103J
R	114		RS1/16S103J
R	115		RS1/16S102J
R	116		RS1/16S163J
R	117		RS1/16S163J
R	201		RS1/16S104J
R	202		RS1/16S473J
R	501		RS1/16S0R0J

Circuit Symbol and No.		Part Name	Part No.
R	505		RS1/16S102J
R	507		RA3C102J
R	508		RA4C681J
R	601		RS1/16S102J
R	602		RS1/16S102J
R	603		RS1/16S223J
R	604		RS1/16S223J
R	801		RS1/8S751J
R	802		RS1/8S751J
CAPACITORS			
C	101		CEV101M6R3
C	102		CKSQYB104K16
C	103		CEV470M6R3
C	104		CKSYB334K16
C	105		CCSRCH330J50
C	106		CKSRYB103K25
C	107		CEV4R7M35
C	108		CKSQYB273K50
C	109		CCSRCH101J50
C	110		CKSQYB104K16
C	111		CKSRYB332K50
C	112		CKSQYB473K16
C	113		CKSRYB103K25
C	114		CKSRYB391K50
C	115		CCSRCH121J50
C	116		CKSRYB682K25
C	117		CKSRYB333K16
C	118		CKSYB334K16
C	119		CKSYB334K16
C	120		CKSYB334K16
C	121		CKSYB334K16
C	122		CKSQYB104K16
C	123		CKSRYB472K50
C	124		CKSQYB104K16
C	125		CCSRCH6R0D50
C	126		CKSRYB153K25
C	127		CCSRCH102J25
C	201		CKSYB334K16
C	202		CKSQYB104K16
C	203		CKSQYB104K16
C	303		CEV470M16
C	304		CKSRYB103K25
C	305		CKSRYB103K25
C	306		CKSRYB103K25
C	307		CEV100M25
C	502		CKSRYB471K50
C	601		CEV101M6R3
C	602		CKSQYB104K16
C	603		CEV4R7M35
C	604		CEV4R7M35
C	605		CKSRYB152K50
C	606		CKSRYB152K50
C	607		CEV220M6R3
C	701	22µF/6.3V	CCH1300
C	702		CKSYB334K16
C	703		CEV101M6R3
C	901		CCSRCH471J50
C	902		CCSRCH271J50
C	903		CCSRCH471J50
C	904		CCSRCH101J50

A Unit Number : CWM5620
Unit Name : Tuner Amp Unit(DEH-P645/UC)

MISCELLANEOUS

Circuit Symbol and No.		Part Name	Part No.
IC	101	IC	TA2050S
IC	102	IC	CA0008AM
IC	151	IC	SN761027DL
IC	201	IC	TDA7386
IC	501	IC	PM2006A
IC	601	IC	PD4884A
IC	701	IC	PD6194A
IC	702	IC	PD8033A
IC	941	IC	S-80730ANDT
Q	101	Chip Transistor	2SA1162
Q	102	Transistor	DTC124EK
Q	201	Transistor	DTC144EK
Q	251	Transistor	IMH3A
Q	253	Transistor	IMD2A
Q	254	Transistor	IMH3A
Q	301	Transistor	DTA124EK
Q	302	Transistor	IMH3A
Q	501	Transistor	2SC2712
Q	601	Transistor	DTA114EK
Q	602	Transistor	DTC114EK
Q	801	Chip Transistor	2SA1162
Q	802	Transistor	2SD1760F5
Q	803	Transistor	DTC114EK
Q	804	Transistor	DTA143EK
Q	805	Transistor	DTC114EK
Q	806	Transistor	2SC2712
Q	807	Transistor	2SB1238
Q	808	Transistor	DTC123EK
Q	809	Transistor	2SD1864
Q	851	Chip Transistor	2SA1162
Q	852	Transistor	DTC124EK
Q	853	Transistor	2SC2412K
Q	911	Transistor	2SD1760F5
Q	912	Transistor	IMD2A
Q	913	Transistor	DTA114EK
Q	921	Transistor	IMX1
Q	922	Transistor	DTC114EK
Q	923	Transistor	2SC2712
Q	931	Transistor	2SB1243
Q	932	Transistor	DTC114EK
Q	941	Transistor	DTA144TK
Q	951	Transistor	2SD2396
Q	952	Transistor	2SB1243
Q	953	Transistor	DTC124EK
Q	954	Transistor	2SA1674
Q	955	Transistor	2SA1674
Q	956	Transistor	IMH1A
Q	957	Transistor	2SC2712
Q	971	Transistor	2SD2396
Q	972	Transistor	IMD2A
D	201	Diode	DAN202K
D	251	Diode	1SS133
D	501	Diode	MA152WK
D	801	Diode	DA204K
D	802	Diode	DA204K
D	803	Diode	DA204K
D	804	Diode	MA3062(M)
D	805	Diode	MA3075(L)
D	806	Diode	MA3039(H)
D	851	LED	BR4361F

Circuit Symbol and No.		Part Name	Part No.
D	901	Diode	ERA15-02VH
D	902	Diode	ERA15-02VH
D	911	Diode	ERA15-02VH
D	912	Diode	HZS6L(B1)
D	921	Diode	HZS7L(C3)
D	922	Diode	ERA15-02VH
D	923	Diode	HZS7L(A1)
D	931	Diode	ERA15-02VH
D	932	Diode	ERA15-02VH
D	933	Diode	ERA15-02VH
D	934	Diode	ERA15-02VH
D	951	Diode	HZS9L(B3)
D	952	Diode	HZS9L(A2)
D	953	Diode	1SS133
D	971	Diode	HZS9L(B1)
L	101	Inductor	LAU3R3J
L	501	Ferri-Inductor	LAU2R2K
L	502	Ferri-Inductor	LAU2R2K
L	503	Ferri-Inductor	LAU2R2K
L	601	Inductor	LAU100K
L	602	Ferri-Inductor	LAU2R2K
L	603	Ferri-Inductor	LAU2R2K
L	701	Inductor	LAU100K
L	702	Ferri-Inductor	LAU2R2K
L	801	Ferri-Inductor	LAU2R2K
L	802	Transformer	MTX9006
TH	601	Thermistor	CCX1037
X	501	Crystal Resonator 7.200MHz	CSS1379
X	601	Resonator 12.58291MHz	CSS1402
X	701	Resonator 4.332MHz	CSS1338
S	941	Switch	CSG1046
		FM/AM Tuner Unit	CWE1417
BZ	601	Buzzer	CPV1011

RESISTORS

R	101		RS1/10S620J
R	102		RS1/10S101J
R	103		RS1/10S101J
R	104		RS1/10S222J
R	105		RS1/10S122J
R	106		RS1/10S122J
R	107		RS1/10S181J
R	108		RS1/10S181J
R	109		RS1/10S153J
R	110		RS1/10S153J
R	111		RS1/10S222J
R	112		RS1/10S222J
R	113		RS1/10S102J
R	114		RS1/10S102J
R	115		RS1/10S473J
R	116		RS1/10S473J
R	117		RS1/10S332J
R	118		RS1/10S682J
R	119		RS1/10S103J
R	133		RS1/10S162J
R	134		RS1/10S162J
R	141		RS1/10S0R0J
R	142		RS1/10S0R0J
R	151		RS1/10S272J
R	152		RS1/10S272J
R	153		RS1/10S151J
R	154		RS1/10S151J
R	155		RS1/10S102J
R	201		RS1/10S103J
R	202		RS1/10S331J
R	203		RS1/10S103J
R	204		RS1/10S103J
R	251		RS1/10S821J
R	252		RS1/10S821J
R	255		RS1/10S223J
R	256		RS1/10S223J
R	259		RS1/10S681J
R	260		RS1/10S681J
R	261		RS1/10S0R0J
R	262		RS1/10S0R0J
R	265		RS1/10S223J
R	266		RS1/10S223J
R	268		RS1/10S0R0J
R	269		RS1/10S0R0J
R	301		RS1/10S151J
R	302		RS1/10S151J
R	303		RS1/10S104J
R	304		RS1/10S104J
R	351		RS1/10S0R0J
R	352		RS1/10S0R0J
R	353		RS1/10S0R0J
R	354		RS1/10S0R0J
R	501		RS1/10S0R0J
R	502		RS1/10S222J
R	503		RS1/10S222J
R	504		RS1/10S102J
R	505		RS1/10S222J
R	506		RS1/10S152J
R	507		RS1/10S472J
R	508		RS1/10S472J
R	509		RS1/10S472J
R	510		RS1/10S182J
R	511		RS1/10S103J
R	513		RS1/10S0R0J
R	514		RS1/10S392J
R	515		RS1/10S392J
R	516		RS1/10S152J
R	517		RS1/10S102J
R	518		RS1/10S102J
R	519		RS1/10S102J
R	520		RS1/10S103J
R	522		RS1/10S562J
R	523		RS1/10S472J
R	526		RS1/10S0R0J
R	528		RS1/10S0R0J
R	601		RS1/10S102J
R	602		RS1/10S473J
R	604		RS1/10S473J
R	605		RS1/10S473J
R	606		RS1/10S473J
R	607		RS1/10S473J
R	608		RS1/10S473J
R	609		RS1/10S473J
R	610		RS1/10S222J
R	611		RS1/10S222J
R	612		RS1/10S222J
R	613		RS1/10S393J
R	614		RS1/10S473J
R	615		RN1/10SE2002D
R	616		RS1/10S473J
R	617		RS1/10S473J
R	618		RS1/10S473J
R	620		RS1/10S0R0J
R	621		RS1/10S202J
R	622		RS1/10S102J

=====Circuit Symbol and No.	===Part Name	Part No.
R 623		RS1/10S473J
R 624		RS1/10S473J
R 625		RS1/10S681J
R 626		RS1/10S102J
R 627		RA3C681J
R 630		RS1/10S473J
R 631		RS1/10S473J
R 632		RS1/10S393J
R 633		RS1/10S0R0J
R 634		RS1/10S0R0J
R 636		RS1/10S473J
R 637		RS1/10S473J
R 638		RS1/8S473J
R 639		RS1/10S473J
R 651		RS1/10S681J
R 652		RS1/10S681J
R 653		RS1/10S681J
R 654		RS1/10S681J
R 701		RS1/10S105J
R 702		RS1/10S0R0J
R 703		RS1/10S681J
R 704		RS1/10S681J
R 705		RS1/10S681J
R 706		RS1/10S473J
R 707		RS1/10S681J
R 708		RS1/10S681J
R 709		RS1/10S681J
R 710		RS1/10S473J
R 711		RS1/10S473J
R 715		RA3C473J
R 717		RS1/10S473J
R 718		RS1/10S473J
R 719		RA3C473J
R 722		RA3C473J
R 753		RS1/10S473J
R 801		RS1/8S222J
R 802		RS1/8S222J
R 803		RS1/8S222J
R 804		RS1/10S132J
R 805		RS1/10S822J
R 806		RS2PMF100J
R 807		RD1/4PU471J
R 808		RS1/10S223J
R 809		RS1/10S682J
R 810		RS1/10S103J
R 811		RS1/10S224J
R 812		RS1/10S104J
R 813		RS2PMF220J
R 814		RS1/10S222J
R 815		RD1/4PU152J
R 851		RS1/8S471J
R 852		RS1/10S473J
R 853		RS1/10S223J
R 854		RS1/10S223J
R 855		RS1/10S103J
R 856		RS1/10S223J
R 857		RS1/10S272J
R 858		RS1/8S102J
R 866		RS1/10S473J
R 867		RS1/10S473J
R 869		RS1/10S103J
R 870		RS1/10S102J
R 911		RS1/10S752J
R 912		RS1/10S101J
R 913		RS1/10S392J

=====Circuit Symbol and No.	===Part Name	Part No.
R 921		RS1/10S103J
R 922		RS1/10S473J
R 923		RS1/10S103J
R 924		RS1/10S103J
R 925		RS1/10S473J
R 926		RS1/10S472J
R 927		RS1/10S224J
R 933		RS1/10S472J
R 934		RD1/4PU272J
R 941		RS1/10S102J
R 942		RS1/10S822J
R 943		RS1/8S471J
R 946		RS1/10S473J
R 951		RD1/4PU221J
R 952		RD1/4PU511J
R 953		RS1/10S1R0J
R 954		RD1/4PU331J
R 955		RD1/4PU331J
R 956		RS1/10S472J
R 957		RD1/4PU102J
R 958		RS1/10S472J
R 959		RD1/4PU102J
R 960		RS1/10S472J
R 961		RS1/10S103J
R 962		RS1/10S473J
R 963		RS1/10S473J
R 971		RD1/4PU221J
R 972		RS1/10S221J
R 973		RS1/10S472J
R 974		RS1/10S222J
CAPACITORS		
C 101		CEJA1R0M50
C 102		CEJA1R0M50
C 103		CEJA1R0M50
C 104		CEJA1R0M50
C 105		CEJA100M16
C 106		CKSQYB104K25
C 107		CKSQYB473K25
C 108		CKSQYB473K25
C 131		CEJA2R2M50
C 132		CEJA2R2M50
C 133		CKSQYB473K16
C 134		CKSQYB473K16
C 135		CEJA4R7M35
C 136		CEJA4R7M35
C 137		CEJA2R2M50
C 138		CEJA2R2M50
C 151		CKSQYB473K25
C 152		CEJA470M10
C 153		CEJANP100M16
C 154		CEJANP100M16
C 155		CKSQYB822K50
C 156		CKSQYB822K50
C 157		CEJA1R0M50
C 158		CEJA1R0M50
C 159		CKSQYB183K50
C 160		CKSQYB183K50
C 161		CKSQYB102K50
C 162		CKSQYB102K50
C 163		CEJANP2R2M35
C 164		CEJANP2R2M35
C 165		CKSQYB333K25
C 166		CKSQYB333K25
C 167		CEJA220M16
C 168		CEJA2R2M50
C 169		CKSQYB104K25

=====Circuit Symbol and No.		===Part Name	Part No.
C	170		CCSQCH101K50
C	201		CKSQYB224K16
C	202		CKSQYB224K16
C	203		CKSQYB224K16
C	204		CKSQYB224K16
C	205		CEJA1R0M50
C	206	3300µF/16V	CCH1150
C	207		CKSQYB473K50
C	208		CEJA100M16
C	209		CEJA1R0M50
C	210		CEJA330M16
C	251		CEJA4R7M35
C	252		CEJA4R7M35
C	253		CEJA4R7M35
C	254		CEJA4R7M35
C	255		CKSQYB221K50
C	256		CKSQYB221K50
C	301		CEJA100M16
C	302		CEJA100M16
C	501		CCSQCH150K50
C	502		CCSQCH150K50
C	503		CKSQYB103K50
C	504		CKSQYB103K50
C	505		CCSQCH101K50
C	506		CKSQYB103K50
C	507		CKSQYB103K50
C	508		CKSQYB102K50
C	509		CEJA220M10
C	512		CKSQYB223K50
C	514		CKSQYB473K50
C	515		CEJA220M6R3
C	516		CKSQYB103K50
C	517		CEJA220M6R3
C	518		CKSQYB103K50
C	522		CKSQYB103K50
C	523		CKLSR473K16
C	525	4.7µF/16V	CCH1250
C	526		CKSQYB103K50
C	529		CCSQCH101K50
C	530		CKSQYB223K50
C	532		CKSQYB473K16
C	533		CKSYB154K25
C	534		CCSQCH101K50
C	601		CCSQCH200J50
C	602		CCSQCH200J50
C	603		CEJA4R7M35
C	604		CCSQCH101J50
C	605		CCSQCH101J50
C	606		CCSQCH101K50
C	607		CCSQCH101K50
C	608		CCSQCH101K50
C	651		CCSQCH821J50
C	652		CCSQCH821J50
C	653		CCSQCH101J50
C	703		CKSQYB224K16
C	704		CKSQYB103K50
C	705		CEAL100M16
C	706		CKSQYB103K50
C	707		CEJA100M16
C	802		CKSQYB104K25
C	803		CEJA100M16
C	804		CKSQYB103K50
C	805		CEJA100M16
C	806		CKSQYB103K50
C	807		CKSQYB333K25

=====Circuit Symbol and No.		===Part Name	Part No.
C	808		CKSQYB333K25
C	853		CKSQYB103K50
C	856		CKSQYB473K25
C	911		CKSQYB103K50
C	912		CEJA470M10
C	913		CKSQYB472K50
C	914	1000µF/16V	CCH1312
C	921		CKSYB105K16
C	922		CKSQYB102K50
C	941		CEJA2R2M50
C	942		CKSQYB102K50
C	951		CKSQYB103K50
C	952		CEJA101M10
C	953	330µF/10V	CCH1181
C	971		CKSQYB473K25
C	972		CKSQYB102K50
C	973		CEJA101M10

A Unit Number : CWM5625
Unit Name : Tuner Amp Unit(DEH-P56/UC)

MISCELLANEOUS

IC	101	IC	TA2050S
IC	102	IC	CA0008AM
IC	151	IC	SN761027DL
IC	201	IC	TDA7386
IC	271	IC	M5282FP
IC	272	IC	MC14052BF
IC	273	IC	NJM4558MD
IC	501	IC	PM2006A
IC	601	IC	PD4886A
IC	851	IC	TPD1018F
IC	941	IC	S-80730ANDT
Q	101	Chip Transistor	2SA1162
Q	102	Transistor	DTC124EK
Q	201	Transistor	DTC144EK
Q	251	Transistor	IMH3A
Q	252	Transistor	IMH3A
Q	253	Transistor	IMD2A
Q	254	Transistor	IMH3A
Q	271	Transistor	IMH1A
Q	272	Transistor	IMD2A
Q	301	Transistor	DTA124EK
Q	302	Transistor	IMH3A
Q	501	Transistor	2SC2712
Q	601	Transistor	DTA114EK
Q	602	Transistor	DTC114EK
Q	801	Chip Transistor	2SA1162
Q	802	Transistor	2SD1760F5
Q	803	Transistor	DTC114EK
Q	804	Transistor	DTA143EK
Q	805	Transistor	DTC114EK
Q	806	Transistor	2SC2712
Q	807	Transistor	2SB1238
Q	808	Transistor	DTC123EK
Q	809	Transistor	2SD1864
Q	851	Chip Transistor	2SA1162
Q	852	Transistor	DTC124EK
Q	853	Transistor	2SC2412K
Q	854	Transistor	2SC2412K
Q	855	Transistor	2SC2412K
Q	911	Transistor	2SD1760F5
Q	912	Transistor	IMD2A
Q	913	Transistor	DTA114EK
Q	921	Transistor	IMX1
Q	922	Transistor	DTC114EK
Q	923	Transistor	2SC2712

Circuit Symbol and No.	Part Name	Part No.
Q 931	Transistor	2SB1243
Q 932	Transistor	DTC114EK
Q 941	Transistor	DTA144TK
Q 951	Transistor	2SD2396
Q 952	Transistor	2SB1243
Q 953	Transistor	DTC124EK
Q 954	Transistor	2SA1674
Q 955	Transistor	2SA1674
Q 956	Transistor	IMH1A
Q 957	Transistor	2SC2712
Q 971	Transistor	2SD2396
Q 972	Transistor	IMD2A
D 201	Diode	DAN202K
D 251	Diode	1SS133
D 252	Diode	1SS133
D 321	Diode	HZS7L(C2)
D 501	Diode	MA152WK
D 801	Diode	DA204K
D 802	Diode	DA204K
D 803	Diode	DA204K
D 804	Diode	MA3062(M)
D 805	Diode	MA3075(L)
D 806	Diode	MA3039(H)
D 851	LED	BR4361F
D 852	Diode	ERA15-02VH
D 853	Diode	ERA15-02VH
D 901	Diode	ERA15-02VH
D 902	Diode	ERA15-02VH
D 911	Diode	ERA15-02VH
D 912	Diode	HZS6L(B1)
D 921	Diode	HZS7L(C3)
D 922	Diode	ERA15-02VH
D 923	Diode	HZS7L(A1)
D 931	Diode	ERA15-02VH
D 932	Diode	ERA15-02VH
D 933	Diode	ERA15-02VH
D 934	Diode	ERA15-02VH
D 951	Diode	HZS9L(B3)
D 952	Diode	HZS9L(A2)
D 953	Diode	1SS133
D 971	Diode	HZS9L(B1)
L 101	Inductor	LAU3R3J
L 501	Ferri-Inductor	LAU2R2K
L 502	Ferri-Inductor	LAU2R2K
L 503	Ferri-Inductor	LAU2R2K
L 601	Inductor	LAU100K
L 602	Ferri-Inductor	LAU2R2K
L 603	Ferri-Inductor	LAU2R2K
L 801	Ferri-Inductor	LAU2R2K
L 802	Transformer	MTX9006
TH 601	Thermistor	CCX1037
X 501	Crystal Resonator 7.200MHz	CSS1379
X 601	Resonator 15.58291MHz	CSS1402
S 941	Switch	CSG1046
	FM/AM Tuner Unit	CWE1417
BZ 601	Buzzer	CPV1011

RESISTORS

Circuit Symbol and No.	Part Name	Part No.
R 101		RS1/10S620J
R 102		RS1/10S101J
R 103		RS1/10S101J
R 104		RS1/10S222J
R 105		RS1/10S122J
R 106		RS1/10S122J
R 107		RS1/10S181J
R 108		RS1/10S181J
R 109		RS1/10S153J
R 110		RS1/10S153J
R 111		RS1/10S222J
R 112		RS1/10S222J
R 113		RS1/10S102J
R 114		RS1/10S102J
R 115		RS1/10S473J
R 116		RS1/10S473J
R 117		RS1/10S332J
R 118		RS1/10S682J
R 119		RS1/10S103J
R 133		RS1/10S162J
R 134		RS1/10S162J
R 141		RS1/10S0R0J
R 142		RS1/10S0R0J
R 151		RS1/10S272J
R 152		RS1/10S272J
R 153		RS1/10S151J
R 154		RS1/10S151J
R 155		RS1/10S102J
R 201		RS1/10S103J
R 202		RS1/10S331J
R 203		RS1/10S103J
R 204		RS1/10S103J
R 251		RS1/10S821J
R 252		RS1/10S821J
R 253		RS1/10S681J
R 254		RS1/10S681J
R 255		RS1/10S223J
R 256		RS1/10S223J
R 257		RS1/10S223J
R 258		RS1/10S223J
R 260		RS1/10S821J
R 261		RS1/10S0R0J
R 262		RS1/10S0R0J
R 263		RS1/10S0R0J
R 264		RS1/10S0R0J
R 266		RS1/10S223J
R 267		RS1/10S0R0J
R 271		RS1/10S183J
R 272		RS1/10S183J
R 273		RS1/10S103J
R 274		RS1/10S243J
R 275		RS1/10S683J
R 277		RS1/10S103J
R 278		RS1/10S103J
R 279		RS1/10S104J
R 280		RS1/10S104J
R 281		RS1/10S104J
R 282		RS1/10S104J
R 283		RS1/10S104J
R 284		RS1/10S104J
R 285		RS1/10S105J
R 287		RS1/10S473J
R 288		RS1/10S473J
R 301		RS1/10S151J
R 302		RS1/10S151J
R 303		RS1/10S104J
R 304		RS1/10S104J
R 351		RS1/10S0R0J
R 352		RS1/10S0R0J
R 353		RS1/10S0R0J
R 354		RS1/10S0R0J
R 363		RS1/10S330J
R 501		RS1/10S0R0J
R 502		RS1/10S222J
R 503		RS1/10S222J

Circuit Symbol and No.	Part Name	Part No.
R 504		RS1/10S102J
R 505		RS1/10S222J
R 506		RS1/10S152J
R 507		RS1/10S472J
R 508		RS1/10S472J
R 509		RS1/10S472J
R 510		RS1/10S182J
R 511		RS1/10S103J
R 513		RS1/10S0R0J
R 514		RS1/10S392J
R 515		RS1/10S392J
R 516		RS1/10S152J
R 517		RS1/10S102J
R 518		RS1/10S102J
R 519		RS1/10S102J
R 520		RS1/10S103J
R 522		RS1/10S562J
R 523		RS1/10S472J
R 526		RS1/10S0R0J
R 528		RS1/10S0R0J
R 601		RS1/10S102J
R 602		RS1/10S473J
R 604		RS1/10S473J
R 605		RS1/10S473J
R 606		RS1/10S473J
R 607		RS1/10S473J
R 608		RS1/10S473J
R 609		RS1/10S473J
R 610		RS1/10S222J
R 611		RS1/10S222J
R 612		RS1/10S222J
R 613		RS1/10S393J
R 614		RS1/10S473J
R 615		RN1/10SE2002D
R 616		RS1/10S473J
R 617		RS1/10S473J
R 618		RS1/10S473J
R 619		RS1/10S153J
R 620		RS1/10S333J
R 621		RS1/10S202J
R 622		RS1/10S102J
R 623		RS1/10S473J
R 624		RS1/10S473J
R 625		RS1/10S681J
R 626		RS1/10S102J
R 627		RA3C681J
R 630		RS1/10S473J
R 631		RS1/10S473J
R 632		RS1/10S393J
R 633		RS1/10S0R0J
R 634		RS1/10S0R0J
R 636		RS1/10S473J
R 639		RS1/10S473J
R 651		RS1/10S681J
R 652		RS1/10S681J
R 653		RS1/10S681J
R 654		RS1/10S681J
R 753		RS1/10S473J
R 801		RS1/8S222J
R 802		RS1/8S222J
R 803		RS1/8S222J
R 804		RS1/10S132J
R 805		RS1/10S822J
R 806		RS2PMF100J
R 807		RD1/4PU471J
R 808		RS1/10S223J
R 809		RS1/10S682J
R 810		RS1/10S103J
R 811		RS1/10S224J
R 812		RS1/10S104J
R 813		RS2PMF220J
R 814		RS1/10S222J
R 815		RD1/4PU152J
R 851		RS1/8S471J
R 852		RS1/10S473J
R 853		RS1/10S223J
R 854		RS1/10S223J
R 855		RS1/10S103J
R 856		RS1/10S223J
R 857		RS1/10S272J
R 858		RS1/8S102J
R 859		RS1/10S223J
R 860		RS1/10S272J
R 861		RS1/10S223J
R 862		RS1/10S272J
R 863		RS1/10S103J
R 864		RS1/8S102J
R 865		RS1/8S102J
R 866		RS1/10S473J
R 867		RS1/10S473J
R 868		RS1/10S103J
R 869		RS1/10S103J
R 870		RS1/10S102J
R 911		RS1/10S752J
R 912		RS1/10S101J
R 913		RS1/10S392J
R 921		RS1/10S103J
R 922		RS1/10S473J
R 923		RS1/10S103J
R 924		RS1/10S103J
R 925		RS1/10S473J
R 926		RS1/10S472J
R 927		RS1/10S224J
R 933		RS1/10S472J
R 934		RD1/4PU272J
R 941		RS1/10S102J
R 942		RS1/10S822J
R 943		RS1/8S471J
R 946		RS1/10S473J
R 951		RD1/4PU221J
R 952		RD1/4PU511J
R 953		RS1/10S1R0J
R 954		RD1/4PU331J
R 955		RD1/4PU331J
R 956		RS1/10S472J
R 957		RD1/4PU102J
R 958		RS1/10S472J
R 959		RD1/4PU102J
R 960		RS1/10S472J
R 961		RS1/10S103J
R 962		RS1/10S473J
R 963		RS1/10S473J
R 971		RD1/4PU221J
R 972		RS1/10S221J
R 973		RS1/10S472J
R 974		RS1/10S222J
CAPACITORS		
C 101		CEJA1R0M50
C 102		CEJA1R0M50
C 103		CEJA1R0M50
C 104		CEJA1R0M50
C 105		CEJA100M16

Circuit Symbol and No.	Part Name	Part No.
C 106		CKSQYB104K25
C 107		CKSQYB473K25
C 108		CKSQYB473K25
C 131		CEJA2R2M50
C 132		CEJA2R2M50
C 133		CKSQYB473K16
C 134		CKSQYB473K16
C 135		CEJA4R7M35
C 136		CEJA4R7M35
C 137		CEJA2R2M50
C 138		CEJA2R2M50
C 151		CKSQYB473K25
C 152		CEJA470M10
C 153		CEJANP100M16
C 154		CEJANP100M16
C 155		CKSQYB822K50
C 156		CKSQYB822K50
C 157		CEJA1R0M50
C 158		CEJA1R0M50
C 159		CKSQYB183K50
C 160		CKSQYB183K50
C 161		CKSQYB102K50
C 162		CKSQYB102K50
C 163		CEJANP2R2M35
C 164		CEJANP2R2M35
C 165		CKSQYB333K25
C 166		CKSQYB333K25
C 167		CEJA220M16
C 168		CEJA2R2M50
C 169		CKSQYB104K25
C 170		CCSQCH101K50
C 201		CKSQYB224K16
C 202		CKSQYB224K16
C 203		CKSQYB224K16
C 204		CKSQYB224K16
C 205		CEJA1R0M50
C 206	3300µF/16V	CCH1150
C 207		CKSQYB473K50
C 208		CEJA100M16
C 209		CEJA1R0M50
C 210		CEJA330M16
C 251		CEJA4R7M35
C 252		CEJA4R7M35
C 253		CEJA4R7M35
C 254		CEJA4R7M35
C 255		CKSQYB221K50
C 256		CKSQYB221K50
C 257		CKSQYB221K50
C 258		CKSQYB221K50
C 271		CEJA220M10
C 272		CEJA101M10
C 273		CKSQYB472K50
C 274		CEJA4R7M35
C 275		CEJANP220M10
C 276		CKSQYB222K50
C 277		CKSQYB183K50
C 278		CKSQYB473K25
C 279		CKSQYB273K25
C 280		CKSQYB103K50
C 281		CKSQYB223K50
C 282		CKSQYB153K50
C 284		CEJA4R7M35
C 287		CKSQYB473K25
C 288		CKSQYB473K16
C 289		CKSQYB103K50

Circuit Symbol and No.	Part Name	Part No.
C 301		CEJA100M16
C 302		CEJA100M16
C 362		CKSQYB103K50
C 501		CCSQCH150K50
C 502		CCSQCH150K50
C 503		CKSQYB103K50
C 504		CKSQYB103K50
C 505		CCSQCH101K50
C 506		CKSQYB103K50
C 507		CKSQYB103K50
C 508		CKSQYB102K50
C 509		CEJA220M10
C 512		CKSQYB223K50
C 514		CKSQYB473K16
C 515		CEJA220M6R3
C 516		CKSQYB103K50
C 517		CEJA220M6R3
C 518		CKSQYB103K50
C 522		CKSQYB103K50
C 523		CKLSR473K16
C 525	4.7µF/16V	CCH1250
C 526		CKSQYB103K50
C 529		CCSQCH101K50
C 530		CKSQYB223K50
C 532		CKSQYB473K16
C 533		CKSYB154K25
C 534		CCSQCH101K50
C 601		CCSQCH200J50
C 602		CCSQCH200J50
C 603		CEJA4R7M35
C 604		CCSQCH101J50
C 605		CCSQCH101J50
C 606		CCSQCH101K50
C 607		CCSQCH101K50
C 608		CCSQCH101K50
C 651		CCSQCH821J50
C 652		CCSQCH821J50
C 653		CCSQCH101J50
C 802		CKSQYB104K25
C 803		CEJA100M16
C 804		CKSQYB103K50
C 805		CEJA100M16
C 806		CKSQYB103K50
C 807		CKSQYB333K25
C 808		CKSQYB333K25
C 851		CKSQYB473K50
C 853		CKSQYB103K50
C 854		CKSQYB103K50
C 855		CKSQYB103K50
C 856		CKSQYB473K25
C 911		CKSQYB103K50
C 912		CEJA470M10
C 913		CKSQYB472K50
C 914	1000µF/16V	CCH1312
C 921		CKSYB105K16
C 922		CKSQYB102K50
C 941		CEJA2R2M50
C 942		CKSQYB102K50
C 951		CKSQYB103K50
C 952		CEJA101M10
C 953	330µF/10V	CCH1181
C 971		CKSQYB473K25
C 972		CKSQYB102K50
C 973		CEJA101M10

A Unit Number : CWM5626
Unit Name : Tuner Amp Unit(DEH-P545/UC)

MISCELLANEOUS

=====Circuit Symbol and No.		===Part Name	Part No.
IC	101	IC	TA2050S
IC	102	IC	CA0008AM
IC	151	IC	SN761027DL
IC	201	IC	TDA7386
IC	501	IC	PM2006A
IC	601	IC	PD4886A
IC	941	IC	S-80730ANDT
Q	101	Chip Transistor	2SA1162
Q	102	Transistor	DTC124EK
Q	201	Transistor	DTC144EK
Q	251	Transistor	IMH3A
Q	253	Transistor	IMD2A
Q	254	Transistor	IMH3A
Q	301	Transistor	DTA124EK
Q	302	Transistor	IMH3A
Q	501	Transistor	2SC2712
Q	601	Transistor	DTA114EK
Q	602	Transistor	DTC114EK
Q	801	Chip Transistor	2SA1162
Q	802	Transistor	2SD1760F5
Q	803	Transistor	DTC114EK
Q	804	Transistor	DTA143EK
Q	805	Transistor	DTC114EK
Q	806	Transistor	2SC2712
Q	807	Transistor	2SB1238
Q	808	Transistor	DTC123EK
Q	809	Transistor	2SD1864
Q	851	Chip Transistor	2SA1162
Q	852	Transistor	DTC124EK
Q	853	Transistor	2SC2412K
Q	911	Transistor	2SD1760F5
Q	912	Transistor	IMD2A
Q	913	Transistor	DTA114EK
Q	921	Transistor	IMX1
Q	922	Transistor	DTC114EK
Q	923	Transistor	2SC2712
Q	931	Transistor	2SB1243
Q	932	Transistor	DTC114EK
Q	941	Transistor	DTA144TK
Q	951	Transistor	2SD2396
Q	952	Transistor	2SB1243
Q	953	Transistor	DTC124EK
Q	954	Transistor	2SA1674
Q	955	Transistor	2SA1674
Q	956	Transistor	IMH1A
Q	957	Transistor	2SC2712
Q	971	Transistor	2SD2396
Q	972	Transistor	IMD2A
D	201	Diode	DAN202K
D	251	Diode	1SS133
D	501	Diode	MA152WK
D	801	Diode	DA204K
D	802	Diode	DA204K
D	803	Diode	DA204K
D	804	Diode	MA3062(M)
D	805	Diode	MA3075(L)
D	806	Diode	MA3039(H)
D	851	LED	BR4361F
D	901	Diode	ERA15-02VH
D	902	Diode	ERA15-02VH

=====Circuit Symbol and No.		===Part Name	Part No.
D	911	Diode	ERA15-02VH
D	912	Diode	HZS6L(B1)
D	921	Diode	HZS7L(C3)
D	922	Diode	ERA15-02VH
D	923	Diode	HZS7L(A1)
D	931	Diode	ERA15-02VH
D	932	Diode	ERA15-02VH
D	933	Diode	ERA15-02VH
D	934	Diode	ERA15-02VH
D	951	Diode	HZS9L(B3)
D	952	Diode	HZS9L(A2)
D	953	Diode	1SS133
D	971	Diode	HZS9L(B1)
L	101	Inductor	LAU3R3J
L	501	Ferri-Inductor	LAU2R2K
L	502	Ferri-Inductor	LAU2R2K
L	503	Ferri-Inductor	LAU2R2K
L	601	Inductor	LAU100K
L	602	Ferri-Inductor	LAU2R2K
L	603	Ferri-Inductor	LAU2R2K
L	801	Ferri-Inductor	LAU2R2K
L	802	Transformer	MTX9006
TH	601	Thermistor	CCX1037
X	501	Crystal Resonator 7.200MHz	CSS1379
X	601	Resonator 15.58291MHz	CSS1402
S	941	Switch	CSG1046
		FM/AM Tuner Unit	CWE1417
BZ	601	Buzzer	CPV1011

RESISTORS

R	101		RS1/10S620J
R	102		RS1/10S101J
R	103		RS1/10S101J
R	104		RS1/10S222J
R	105		RS1/10S122J
R	106		RS1/10S122J
R	107		RS1/10S181J
R	108		RS1/10S181J
R	109		RS1/10S153J
R	110		RS1/10S153J
R	111		RS1/10S222J
R	112		RS1/10S222J
R	113		RS1/10S102J
R	114		RS1/10S102J
R	115		RS1/10S473J
R	116		RS1/10S473J
R	117		RS1/10S332J
R	118		RS1/10S682J
R	119		RS1/10S103J
R	133		RS1/10S162J
R	134		RS1/10S162J
R	141		RS1/10S0R0J
R	142		RS1/10S0R0J
R	151		RS1/10S272J
R	152		RS1/10S272J
R	153		RS1/10S151J
R	154		RS1/10S151J
R	155		RS1/10S102J
R	201		RS1/10S103J
R	202		RS1/10S331J
R	203		RS1/10S103J
R	204		RS1/10S103J
R	251		RS1/10S821J
R	252		RS1/10S821J
R	255		RS1/10S223J

=====Circuit Symbol and No.	===Part Name	Part No.
R 256		RS1/10S223J
R 259		RS1/10S681J
R 260		RS1/10S681J
R 261		RS1/10S0R0J
R 262		RS1/10S0R0J
R 265		RS1/10S223J
R 266		RS1/10S223J
R 268		RS1/10S0R0J
R 269		RS1/10S0R0J
R 301		RS1/10S151J
R 302		RS1/10S151J
R 303		RS1/10S104J
R 304		RS1/10S104J
R 351		RS1/10S0R0J
R 352		RS1/10S0R0J
R 353		RS1/10S0R0J
R 354		RS1/10S0R0J
R 501		RS1/10S0R0J
R 502		RS1/10S222J
R 503		RS1/10S222J
R 504		RS1/10S102J
R 505		RS1/10S222J
R 506		RS1/10S152J
R 507		RS1/10S472J
R 508		RS1/10S472J
R 509		RS1/10S472J
R 510		RS1/10S182J
R 511		RS1/10S103J
R 513		RS1/10S0R0J
R 514		RS1/10S392J
R 515		RS1/10S392J
R 516		RS1/10S152J
R 517		RS1/10S102J
R 518		RS1/10S102J
R 519		RS1/10S102J
R 520		RS1/10S103J
R 522		RS1/10S562J
R 523		RS1/10S472J
R 526		RS1/10S0R0J
R 528		RS1/10S0R0J
R 601		RS1/10S102J
R 602		RS1/10S473J
R 604		RS1/10S473J
R 605		RS1/10S473J
R 606		RS1/10S473J
R 607		RS1/10S473J
R 608		RS1/10S473J
R 609		RS1/10S473J
R 610		RS1/10S222J
R 611		RS1/10S222J
R 612		RS1/10S222J
R 613		RS1/10S393J
R 614		RS1/10S473J
R 615		RN1/10SE2002D
R 616		RS1/10S473J
R 617		RS1/10S473J
R 618		RS1/10S473J
R 619		RS1/10S333J
R 620		RS1/10S333J
R 621		RS1/10S202J
R 622		RS1/10S102J
R 623		RS1/10S473J
R 624		RS1/10S473J
R 625		RS1/10S681J
R 626		RS1/10S102J

=====Circuit Symbol and No.	===Part Name	Part No.
R 627		RA3C681J
R 630		RS1/10S473J
R 631		RS1/10S473J
R 632		RS1/10S393J
R 633		RS1/10S0R0J
R 634		RS1/10S0R0J
R 636		RS1/10S473J
R 639		RS1/10S473J
R 651		RS1/10S681J
R 652		RS1/10S681J
R 653		RS1/10S681J
R 654		RS1/10S681J
R 753		RS1/10S473J
R 801		RS1/8S222J
R 802		RS1/8S222J
R 803		RS1/8S222J
R 804		RS1/10S132J
R 805		RS1/10S822J
R 806		RS2PMF100J
R 807		RD1/4PU471J
R 808		RS1/10S223J
R 809		RS1/10S682J
R 810		RS1/10S103J
R 811		RS1/10S224J
R 812		RS1/10S104J
R 813		RS2PMF220J
R 814		RS1/10S222J
R 815		RD1/4PU152J
R 851		RS1/8S471J
R 852		RS1/10S473J
R 853		RS1/10S223J
R 854		RS1/10S223J
R 855		RS1/10S103J
R 856		RS1/10S223J
R 857		RS1/10S272J
R 858		RS1/8S102J
R 866		RS1/10S473J
R 867		RS1/10S473J
R 869		RS1/10S103J
R 870		RS1/10S102J
R 911		RS1/10S752J
R 912		RS1/10S101J
R 913		RS1/10S392J
R 921		RS1/10S103J
R 922		RS1/10S473J
R 923		RS1/10S103J
R 924		RS1/10S103J
R 925		RS1/10S473J
R 926		RS1/10S472J
R 927		RS1/10S224J
R 933		RS1/10S472J
R 934		RD1/4PU272J
R 941		RS1/10S102J
R 942		RS1/10S822J
R 943		RS1/8S471J
R 946		RS1/10S473J
R 951		RD1/4PU221J
R 952		RD1/4PU511J
R 953		RS1/10S1R0J
R 954		RD1/4PU331J
R 955		RD1/4PU331J
R 956		RS1/10S472J
R 957		RD1/4PU102J
R 958		RS1/10S472J
R 959		RD1/4PU102J

Circuit Symbol and No.		Part Name	Part No.
R	960		RS1/10S472J
R	961		RS1/10S103J
R	962		RS1/10S473J
R	963		RS1/10S473J
R	971		RD1/4PU221J
R	972		RS1/10S221J
R	973		RS1/10S472J
R	974		RS1/10S222J
CAPACITORS			
C	101		CEJA1R0M50
C	102		CEJA1R0M50
C	103		CEJA1R0M50
C	104		CEJA1R0M50
C	105		CEJA100M16
C	106		CKSQYB104K25
C	107		CKSQYB473K25
C	108		CKSQYB473K25
C	131		CEJA2R2M50
C	132		CEJA2R2M50
C	133		CKSQYB473K16
C	134		CKSQYB473K16
C	135		CEJA4R7M35
C	136		CEJA4R7M35
C	137		CEJA2R2M50
C	138		CEJA2R2M50
C	151		CKSQYB473K25
C	152		CEJA470M10
C	153		CEJANP100M16
C	154		CEJANP100M16
C	155		CKSQYB822K50
C	156		CKSQYB822K50
C	157		CEJA1R0M50
C	158		CEJA1R0M50
C	159		CKSQYB183K50
C	160		CKSQYB183K50
C	161		CKSQYB102K50
C	162		CKSQYB102K50
C	163		CEJANP2R2M35
C	164		CEJANP2R2M35
C	165		CKSQYB333K25
C	166		CKSQYB333K25
C	167		CEJA220M16
C	168		CEJA2R2M50
C	169		CKSQYB104K25
C	170		CCSQCH101K50
C	201		CKSQYB224K16
C	202		CKSQYB224K16
C	203		CKSQYB224K16
C	204		CKSQYB224K16
C	205		CEJA1R0M50
C	206	3300µF/16V	CCH1150
C	207		CKSQYB473K50
C	208		CEJA100M16
C	209		CEJA1R0M50
C	210		CEJA330M16
C	251		CEJA4R7M35
C	252		CEJA4R7M35
C	253		CEJA4R7M35
C	254		CEJA4R7M35
C	255		CKSQYB221K50
C	256		CKSQYB221K50
C	301		CEJA100M16
C	302		CEJA100M16
C	501		CCSQCH150K50

Circuit Symbol and No.		Part Name	Part No.
C	502		CCSQCH150K50
C	503		CKSQYB103K50
C	504		CKSQYB103K50
C	505		CCSQCH101K50
C	506		CKSQYB103K50
C	507		CKSQYB103K50
C	508		CKSQYB102K50
C	509		CEJA220M10
C	512		CKSQYB223K50
C	514		CKSQYB473K16
C	515		CEJA220M6R3
C	516		CKSQYB103K50
C	517		CEJA220M6R3
C	518		CKSQYB103K50
C	522		CKSQYB103K50
C	523		CKLSR473K16
C	525	4.7µF/16V	CCH1250
C	526		CKSQYB103K50
C	529		CCSQCH101K50
C	530		CKSQYB223K50
C	532		CKSQYB473K16
C	533		CKSYB154K25
C	534		CCSQCH101K50
C	601		CCSQCH200J50
C	602		CCSQCH200J50
C	603		CEJA4R7M35
C	604		CCSQCH101J50
C	605		CCSQCH101J50
C	606		CCSQCH101K50
C	607		CCSQCH101K50
C	608		CCSQCH101K50
C	651		CCSQCH821J50
C	652		CCSQCH821J50
C	653		CCSQCH101J50
C	802		CKSQYB104K25
C	803		CEJA100M16
C	804		CKSQYB103K50
C	805		CEJA100M16
C	806		CKSQYB103K50
C	807		CKSQYB333K25
C	808		CKSQYB333K25
C	853		CKSQYB103K50
C	856		CKSQYB473K25
C	911		CKSQYB103K50
C	912		CEJA470M10
C	913		CKSQYB472K50
C	914	1000µF/16V	CCH1312
C	921		CKSYB105K16
C	922		CKSQYB102K50
C	941		CEJA2R2M50
C	942		CKSQYB102K50
C	951		CKSQYB103K50
C	952		CEJA101M10
C	953	330µF/10V	CCH1181
C	971		CKSQYB473K25
C	972		CKSQYB102K50
C	973		CEJA101M10

A Unit Number : CWM5627
Unit Name : Tuner Amp Unit(DEH-46/UC)

MISCELLANEOUS

IC	151	IC	SN761027DL
IC	201	IC	TDA7384
IC	271	IC	M5282FP
IC	272	IC	MC14052BF
IC	273	IC	NJM4558MD

Circuit Symbol and No.		Part Name	Part No.
IC	501	IC	PM2006A
IC	601	IC	PD4886A
IC	851	IC	TPD1018F
IC	941	IC	S-80730ANDT
Q	201	Transistor	DTC144EK
Q	251	Transistor	IMH3A
Q	252	Transistor	IMH3A
Q	253	Transistor	IMD2A
Q	254	Transistor	IMH3A
Q	271	Transistor	IMH1A
Q	272	Transistor	IMD2A
Q	301	Transistor	DTA124EK
Q	302	Transistor	IMH3A
Q	501	Transistor	2SC2712
Q	601	Transistor	DTA114EK
Q	602	Transistor	DTC114EK
Q	801	Chip Transistor	2SA1162
Q	802	Transistor	2SD1760F5
Q	803	Transistor	DTC114EK
Q	804	Transistor	DTA143EK
Q	805	Transistor	DTC114EK
Q	806	Transistor	2SC2712
Q	807	Transistor	2SB1238
Q	808	Transistor	DTC123EK
Q	809	Transistor	2SD1864
Q	851	Chip Transistor	2SA1162
Q	852	Transistor	DTC124EK
Q	853	Transistor	2SC2412K
Q	854	Transistor	2SC2412K
Q	855	Transistor	2SC2412K
Q	911	Transistor	2SD1760F5
Q	912	Transistor	IMD2A
Q	913	Transistor	DTA114EK
Q	921	Transistor	IMX1
Q	922	Transistor	DTC114EK
Q	923	Transistor	2SC2712
Q	931	Transistor	2SB1243
Q	932	Transistor	DTC114EK
Q	951	Transistor	2SD2396
Q	952	Transistor	2SB1243
Q	953	Transistor	DTC124EK
Q	954	Transistor	2SA1674
Q	955	Transistor	2SA1674
Q	956	Transistor	IMH1A
Q	957	Transistor	2SC2712
Q	971	Transistor	2SD2396
Q	972	Transistor	IMD2A
D	201	Diode	DAN202K
D	251	Diode	1SS133
D	252	Diode	1SS133
D	321	Diode	HZS7L(C2)
D	501	Diode	MA152WK
D	801	Diode	DA204K
D	802	Diode	DA204K
D	803	Diode	DA204K
D	804	Diode	MA3062(M)
D	805	Diode	MA3075(L)
D	806	Diode	MA3039(H)
D	851	LED	BR4361F
D	852	Diode	ERA15-02VH
D	853	Diode	ERA15-02VH
D	901	Diode	ERA15-02VH
D	902	Diode	ERA15-02VH
D	911	Diode	ERA15-02VH
D	912	Diode	HZS6L(B1)

Circuit Symbol and No.		Part Name	Part No.
D	921	Diode	HZS7L(C3)
D	922	Diode	ERA15-02VH
D	923	Diode	HZS7L(A1)
D	931	Diode	ERA15-02VH
D	932	Diode	ERA15-02VH
D	933	Diode	ERA15-02VH
D	934	Diode	ERA15-02VH
D	951	Diode	HZS9L(B3)
D	952	Diode	HZS9L(A2)
D	953	Diode	1SS133
D	971	Diode	HZS9L(B1)
L	501	Ferri-Inductor	LAU2R2K
L	502	Ferri-Inductor	LAU2R2K
L	503	Ferri-Inductor	LAU2R2K
L	601	Inductor	LAU100K
L	602	Ferri-Inductor	LAU2R2K
L	603	Ferri-Inductor	LAU2R2K
L	801	Ferri-Inductor	LAU2R2K
L	802	Transformer	MTX9006
TH	601	Thermistor	CCX1037
X	501	Crystal Resonator 7.200MHz	CSS1379
X	601	Resonator 15.58291MHz	CSS1402
		FM/AM Tuner Unit	CWE1417
BZ	601	Buzzer	CPV1011

RESISTORS

R	115	RS1/10S473J
R	133	RS1/10S162J
R	134	RS1/10S162J
R	141	RS1/10S0R0J
R	142	RS1/10S0R0J
R	151	RS1/10S272J
R	152	RS1/10S272J
R	153	RS1/10S151J
R	154	RS1/10S151J
R	155	RS1/10S102J
R	201	RS1/10S103J
R	202	RS1/10S331J
R	203	RS1/10S103J
R	204	RS1/10S103J
R	251	RS1/10S821J
R	252	RS1/10S821J
R	253	RS1/10S681J
R	254	RS1/10S681J
R	255	RS1/10S223J
R	256	RS1/10S223J
R	257	RS1/10S223J
R	258	RS1/10S223J
R	260	RS1/10S821J
R	261	RS1/10S0R0J
R	262	RS1/10S0R0J
R	263	RS1/10S0R0J
R	264	RS1/10S0R0J
R	266	RS1/10S223J
R	267	RS1/10S0R0J
R	271	RS1/10S183J
R	272	RS1/10S183J
R	273	RS1/10S103J
R	274	RS1/10S243J
R	275	RS1/10S683J
R	277	RS1/10S103J
R	278	RS1/10S103J
R	279	RS1/10S104J
R	280	RS1/10S104J
R	281	RS1/10S104J
R	282	RS1/10S104J

=====Circuit Symbol and No.		===Part Name	Part No.
R	283		RS1/10S104J
R	284		RS1/10S104J
R	285		RS1/10S105J
R	287		RS1/10S473J
R	288		RS1/10S473J
R	301		RS1/10S151J
R	302		RS1/10S151J
R	303		RS1/10S104J
R	304		RS1/10S104J
R	351		RS1/10S0R0J
R	352		RS1/10S0R0J
R	353		RS1/10S0R0J
R	354		RS1/10S0R0J
R	363		RS1/10S330J
R	501		RS1/10S0R0J
R	502		RS1/10S222J
R	503		RS1/10S222J
R	504		RS1/10S102J
R	505		RS1/10S222J
R	506		RS1/10S152J
R	507		RS1/10S472J
R	508		RS1/10S472J
R	509		RS1/10S472J
R	510		RS1/10S182J
R	511		RS1/10S103J
R	513		RS1/10S0R0J
R	514		RS1/10S392J
R	515		RS1/10S392J
R	516		RS1/10S152J
R	517		RS1/10S102J
R	518		RS1/10S102J
R	519		RS1/10S102J
R	520		RS1/10S103J
R	522		RS1/10S562J
R	523		RS1/10S472J
R	526		RS1/10S0R0J
R	528		RS1/10S0R0J
R	601		RS1/10S102J
R	602		RS1/10S473J
R	604		RS1/10S473J
R	605		RS1/10S473J
R	606		RS1/10S473J
R	607		RS1/10S473J
R	608		RS1/10S473J
R	609		RS1/10S473J
R	610		RS1/10S222J
R	611		RS1/10S222J
R	612		RS1/10S222J
R	613		RS1/10S393J
R	614		RS1/10S473J
R	615		RN1/10SE2002D
R	616		RS1/10S473J
R	617		RS1/10S473J
R	618		RS1/10S473J
R	619		RS1/10S683J
R	620		RS1/10S333J
R	621		RS1/10S202J
R	622		RS1/10S102J
R	623		RS1/10S473J
R	624		RS1/10S473J
R	625		RS1/10S681J
R	626		RS1/10S102J
R	627		RA3C681J
R	630		RS1/10S473J
R	631		RS1/10S473J

=====Circuit Symbol and No.		===Part Name	Part No.
R	632		RS1/10S393J
R	633		RS1/10S0R0J
R	634		RS1/10S0R0J
R	636		RS1/10S473J
R	639		RS1/10S473J
R	651		RS1/10S681J
R	652		RS1/10S681J
R	653		RS1/10S681J
R	654		RS1/10S681J
R	753		RS1/10S473J
R	801		RS1/8S222J
R	802		RS1/8S222J
R	803		RS1/8S222J
R	804		RS1/10S132J
R	805		RS1/10S822J
R	806		RS2PMF100J
R	807		RD1/4PU471J
R	808		RS1/10S223J
R	809		RS1/10S682J
R	810		RS1/10S103J
R	811		RS1/10S224J
R	812		RS1/10S104J
R	813		RS2PMF220J
R	814		RS1/10S222J
R	815		RD1/4PU152J
R	851		RS1/8S471J
R	852		RS1/10S473J
R	853		RS1/10S223J
R	854		RS1/10S223J
R	855		RS1/10S103J
R	856		RS1/10S223J
R	857		RS1/10S272J
R	858		RS1/8S102J
R	859		RS1/10S223J
R	860		RS1/10S272J
R	861		RS1/10S223J
R	862		RS1/10S272J
R	863		RS1/10S103J
R	864		RS1/8S102J
R	865		RS1/8S102J
R	866		RS1/10S473J
R	867		RS1/10S473J
R	868		RS1/10S103J
R	869		RS1/10S103J
R	870		RS1/10S102J
R	911		RS1/10S752J
R	912		RS1/10S101J
R	913		RS1/10S392J
R	921		RS1/10S103J
R	922		RS1/10S473J
R	923		RS1/10S103J
R	924		RS1/10S103J
R	925		RS1/10S473J
R	926		RS1/10S472J
R	927		RS1/10S224J
R	933		RS1/10S472J
R	934		RD1/4PU272J
R	941		RS1/10S102J
R	942		RS1/10S822J
R	951		RD1/4PU221J
R	952		RD1/4PU511J
R	953		RS1/10S1R0J
R	954		RD1/4PU331J
R	955		RD1/4PU331J
R	956		RS1/10S472J

Circuit Symbol and No.		Part Name	Part No.
R	957		RD1/4PU102J
R	958		RS1/10S472J
R	959		RD1/4PU102J
R	960		RS1/10S472J
R	961		RS1/10S103J
R	962		RS1/10S473J
R	963		RS1/10S473J
R	971		RD1/4PU221J
R	972		RS1/10S221J
R	973		RS1/10S472J
R	974		RS1/10S222J
CAPACITORS			
C	133		CKSQYB473K16
C	134		CKSQYB473K16
C	135		CEJA4R7M35
C	136		CEJA4R7M35
C	137		CEJA2R2M50
C	138		CEJA2R2M50
C	151		CKSQYB473K25
C	152		CEJA470M10
C	153		CEJANP100M16
C	154		CEJANP100M16
C	155		CKSQYB822K50
C	156		CKSQYB822K50
C	157		CEJA1R0M50
C	158		CEJA1R0M50
C	159		CKSQYB183K50
C	160		CKSQYB183K50
C	161		CKSQYB102K50
C	162		CKSQYB102K50
C	163		CEJANP2R2M35
C	164		CEJANP2R2M35
C	165		CKSQYB333K25
C	166		CKSQYB333K25
C	167		CEJA220M16
C	168		CEJA2R2M50
C	169		CKSQYB104K25
C	170		CCSQCH101K50
C	201		CKSQYB224K16
C	202		CKSQYB224K16
C	203		CKSQYB224K16
C	204		CKSQYB224K16
C	205		CEJA1R0M50
C	206	3300µF/16V	CCH1150
C	207		CKSQYB473K50
C	208		CEJA100M16
C	209		CEJA1R0M50
C	210		CEJA330M16
C	251		CEJA4R7M35
C	252		CEJA4R7M35
C	253		CEJA4R7M35
C	254		CEJA4R7M35
C	255		CKSQYB221K50
C	256		CKSQYB221K50
C	257		CKSQYB221K50
C	258		CKSQYB221K50
C	271		CEJA220M10
C	272		CEJA101M10
C	273		CKSQYB472K50
C	274		CEJA4R7M35
C	275		CEJANP220M10
C	276		CKSQYB222K50
C	277		CKSQYB183K50
C	278		CKSQYB473K25
C	279		CKSQYB273K25
C	280		CKSQYB103K50
C	281		CKSQYB223K50

Circuit Symbol and No.		Part Name	Part No.
C	282		CKSQYB153K50
C	284		CEJA4R7M35
C	287		CKSQYB473K25
C	288		CKSQYB473K16
C	289		CKSQYB103K50
C	301		CEJA100M16
C	302		CEJA100M16
C	362		CKSQYB103K50
C	501		CCSQCH150K50
C	502		CCSQCH150K50
C	503		CKSQYB103K50
C	504		CKSQYB103K50
C	505		CCSQCH101K50
C	506		CKSQYB103K50
C	507		CKSQYB103K50
C	508		CKSQYB102K50
C	509		CEJA220M10
C	512		CKSQYB223K50
C	514		CKSQYB473K16
C	515		CEJA220M6R3
C	516		CKSQYB103K50
C	517		CEJA220M6R3
C	518		CKSQYB103K50
C	522		CKSQYB103K50
C	523		CKLSR473K16
C	525	4.7µF/16V	CCH1250
C	526		CKSQYB103K50
C	529		CCSQCH101K50
C	530		CKSQYB223K50
C	532		CKSQYB473K16
C	533		CKSYB154K25
C	534		CCSQCH101K50
C	601		CCSQCH200J50
C	602		CCSQCH200J50
C	603		CEJA4R7M35
C	604		CCSQCH101J50
C	605		CCSQCH101J50
C	606		CCSQCH101K50
C	607		CCSQCH101K50
C	608		CCSQCH101K50
C	651		CCSQCH821J50
C	652		CCSQCH821J50
C	653		CCSQCH101J50
C	802		CKSQYB104K25
C	803		CEJA100M16
C	804		CKSQYB103K50
C	805		CEJA100M16
C	806		CKSQYB103K50
C	807		CKSQYB333K25
C	808		CKSQYB333K25
C	851		CKSQYB473K50
C	853		CKSQYB103K50
C	854		CKSQYB103K50
C	855		CKSQYB103K50
C	856		CKSQYB473K25
C	911		CKSQYB103K50
C	912		CEJA470M10
C	913		CKSQYB472K50
C	914	1000µF/16V	CCH1312
C	921		CKSYB105K16
C	922		CKSQYB102K50
C	941		CEJA2R2M50
C	942		CKSQYB102K50
C	951		CKSQYB103K50
C	952		CEJA101M10

=====Circuit Symbol and No.		===Part Name	Part No.
C	953	330µF/10V	CCH1181
C	971		CKSQYB473K25
C	972		CKSQYB102K50
C	973		CEJA101M10

A Unit Number : CWM5628
Unit Name : Tuner Amp Unit(DEH-445/UC)

MISCELLANEOUS

IC	151	IC	SN761027DL
IC	201	IC	TDA7384
IC	501	IC	PM2006A
IC	601	IC	PD4886A
IC	941	IC	S-80730ANDT
Q	201	Transistor	DTC144EK
Q	251	Transistor	IMH3A
Q	253	Transistor	IMD2A
Q	254	Transistor	IMH3A
Q	301	Transistor	DTA124EK
Q	302	Transistor	IMH3A
Q	501	Transistor	2SC2712
Q	601	Transistor	DTA114EK
Q	602	Transistor	DTC114EK
Q	801	Chip Transistor	2SA1162
Q	802	Transistor	2SD1760F5
Q	803	Transistor	DTC114EK
Q	804	Transistor	DTA143EK
Q	805	Transistor	DTC114EK
Q	806	Transistor	2SC2712
Q	807	Transistor	2SB1238
Q	808	Transistor	DTC123EK
Q	809	Transistor	2SD1864
Q	851	Chip Transistor	2SA1162
Q	852	Transistor	DTC124EK
Q	853	Transistor	2SC2412K
Q	911	Transistor	2SD1760F5
Q	912	Transistor	IMD2A
Q	913	Transistor	DTA114EK
Q	921	Transistor	IMX1
Q	922	Transistor	DTC114EK
Q	923	Transistor	2SC2712
Q	931	Transistor	2SB1243
Q	932	Transistor	DTC114EK
Q	951	Transistor	2SD2396
Q	952	Transistor	2SB1243
Q	953	Transistor	DTC124EK
Q	954	Transistor	2SA1674
Q	955	Transistor	2SA1674
Q	956	Transistor	IMH1A
Q	957	Transistor	2SC2712
Q	971	Transistor	2SD2396
Q	972	Transistor	IMD2A
D	201	Diode	DAN202K
D	251	Diode	1SS133
D	501	Diode	MA152WK
D	801	Diode	DA204K
D	802	Diode	DA204K
D	803	Diode	DA204K
D	804	Diode	MA3062(M)
D	805	Diode	MA3075(L)
D	806	Diode	MA3039(H)
D	851	LED	BR4361F
D	901	Diode	ERA15-02VH
D	902	Diode	ERA15-02VH
D	911	Diode	ERA15-02VH
D	912	Diode	HZS6L(B1)
D	921	Diode	HZS7L(C3)
D	922	Diode	ERA15-02VH
D	923	Diode	HZS7L(A1)

=====Circuit Symbol and No.		===Part Name	Part No.
D	931	Diode	ERA15-02VH
D	932	Diode	ERA15-02VH
D	933	Diode	ERA15-02VH
D	934	Diode	ERA15-02VH
D	951	Diode	HZS9L(B3)
D	952	Diode	HZS9L(A2)
D	953	Diode	1SS133
D	971	Diode	HZS9L(B1)
L	501	Ferri-Inductor	LAU2R2K
L	502	Ferri-Inductor	LAU2R2K
L	503	Ferri-Inductor	LAU2R2K
L	601	Inductor	LAU100K
L	602	Ferri-Inductor	LAU2R2K
L	603	Ferri-Inductor	LAU2R2K
L	801	Ferri-Inductor	LAU2R2K
L	802	Transformer	MTX9006
TH	601	Thermistor	CCX1037
X	501	Crystal Resonator 7.200MHz	CSS1379
X	601	Resonator 15.58291MHz	CSS1402
		FM/AM Tuner Unit	CWE1417
BZ	601	Buzzer	CPV1011

RESISTORS

R	115		RS1/10S473J
R	133		RS1/10S162J
R	134		RS1/10S162J
R	141		RS1/10S0R0J
R	142		RS1/10S0R0J
R	151		RS1/10S272J
R	152		RS1/10S272J
R	153		RS1/10S151J
R	154		RS1/10S151J
R	155		RS1/10S102J
R	201		RS1/10S103J
R	202		RS1/10S331J
R	203		RS1/10S103J
R	204		RS1/10S103J
R	251		RS1/10S821J
R	252		RS1/10S821J
R	255		RS1/10S223J
R	256		RS1/10S223J
R	259		RS1/10S681J
R	260		RS1/10S681J
R	261		RS1/10S0R0J
R	262		RS1/10S0R0J
R	265		RS1/10S223J
R	266		RS1/10S223J
R	268		RS1/10S0R0J
R	269		RS1/10S0R0J
R	301		RS1/10S151J
R	302		RS1/10S151J
R	303		RS1/10S104J
R	304		RS1/10S104J
R	351		RS1/10S0R0J
R	352		RS1/10S0R0J
R	353		RS1/10S0R0J
R	354		RS1/10S0R0J
R	501		RS1/10S0R0J
R	502		RS1/10S222J
R	503		RS1/10S222J
R	504		RS1/10S102J
R	505		RS1/10S222J
R	506		RS1/10S152J
R	507		RS1/10S472J
R	508		RS1/10S472J
R	509		RS1/10S472J
R	510		RS1/10S182J
R	511		RS1/10S103J

=====Circuit Symbol and No.	===Part Name	Part No.
R	513	RS1/10S0R0J
R	514	RS1/10S392J
R	515	RS1/10S392J
R	516	RS1/10S152J
R	517	RS1/10S102J
R	518	RS1/10S102J
R	519	RS1/10S102J
R	520	RS1/10S103J
R	522	RS1/10S562J
R	523	RS1/10S472J
R	526	RS1/10S0R0J
R	528	RS1/10S0R0J
R	601	RS1/10S102J
R	602	RS1/10S473J
R	604	RS1/10S473J
R	605	RS1/10S473J
R	606	RS1/10S473J
R	607	RS1/10S473J
R	608	RS1/10S473J
R	609	RS1/10S473J
R	610	RS1/10S222J
R	611	RS1/10S222J
R	612	RS1/10S222J
R	613	RS1/10S393J
R	614	RS1/10S473J
R	615	RN1/10SE2002D
R	616	RS1/10S473J
R	617	RS1/10S473J
R	618	RS1/10S473J
R	619	RS1/10S104J
R	620	RS1/10S223J
R	621	RS1/10S202J
R	622	RS1/10S102J
R	623	RS1/10S473J
R	624	RS1/10S473J
R	625	RS1/10S681J
R	626	RS1/10S102J
R	627	RA3C681J
R	630	RS1/10S473J
R	631	RS1/10S473J
R	632	RS1/10S393J
R	633	RS1/10S0R0J
R	634	RS1/10S0R0J
R	636	RS1/10S473J
R	639	RS1/10S473J
R	651	RS1/10S681J
R	652	RS1/10S681J
R	653	RS1/10S681J
R	654	RS1/10S681J
R	753	RS1/10S473J
R	801	RS1/8S222J
R	802	RS1/8S222J
R	803	RS1/8S222J
R	804	RS1/10S132J
R	805	RS1/10S822J
R	806	RS2PMF100J
R	807	RD1/4PU471J
R	808	RS1/10S223J
R	809	RS1/10S682J
R	810	RS1/10S103J
R	811	RS1/10S224J
R	812	RS1/10S104J
R	813	RS2PMF220J
R	814	RS1/10S222J
R	815	RD1/4PU152J

=====Circuit Symbol and No.	===Part Name	Part No.
R	851	RS1/8S471J
R	852	RS1/10S473J
R	853	RS1/10S223J
R	854	RS1/10S223J
R	855	RS1/10S103J
R	856	RS1/10S223J
R	857	RS1/10S272J
R	858	RS1/8S102J
R	866	RS1/10S473J
R	867	RS1/10S473J
R	869	RS1/10S103J
R	870	RS1/10S102J
R	911	RS1/10S752J
R	912	RS1/10S101J
R	913	RS1/10S392J
R	921	RS1/10S103J
R	922	RS1/10S473J
R	923	RS1/10S103J
R	924	RS1/10S103J
R	925	RS1/10S473J
R	926	RS1/10S472J
R	927	RS1/10S224J
R	933	RS1/10S472J
R	934	RD1/4PU272J
R	941	RS1/10S102J
R	942	RS1/10S822J
R	951	RD1/4PU221J
R	952	RD1/4PU511J
R	953	RS1/10S1R0J
R	954	RD1/4PU331J
R	955	RD1/4PU331J
R	956	RS1/10S472J
R	957	RD1/4PU102J
R	958	RS1/10S472J
R	959	RD1/4PU102J
R	960	RS1/10S472J
R	961	RS1/10S103J
R	962	RS1/10S473J
R	963	RS1/10S473J
R	971	RD1/4PU221J
R	972	RS1/10S221J
R	973	RS1/10S472J
R	974	RS1/10S222J
CAPACITORS		
C	133	CKSQYB473K16
C	134	CKSQYB473K16
C	135	CEJA4R7M35
C	136	CEJA4R7M35
C	137	CEJA2R2M50
C	138	CEJA2R2M50
C	151	CKSQYB473K25
C	152	CEJA470M10
C	153	CEJANP100M16
C	154	CEJANP100M16
C	155	CKSQYB822K50
C	156	CKSQYB822K50
C	157	CEJA1R0M50
C	158	CEJA1R0M50
C	159	CKSQYB183K50
C	160	CKSQYB183K50
C	161	CKSQYB102K50
C	162	CKSQYB102K50
C	163	CEJANP2R2M35
C	164	CEJANP2R2M35

=====Circuit Symbol and No.		===Part Name	Part No.
C	165		CKSQYB333K25
C	166		CKSQYB333K25
C	167		CEJA220M16
C	168		CEJA2R2M50
C	169		CKSQYB104K25
C	170		CCSQCH101K50
C	201		CKSQYB224K16
C	202		CKSQYB224K16
C	203		CKSQYB224K16
C	204		CKSQYB224K16
C	205		CEJA1R0M50
C	206	3300µF/16V	CCH1150
C	207		CKSQYB473K50
C	208		CEJA100M16
C	209		CEJA1R0M50
C	210		CEJA330M16
C	251		CEJA4R7M35
C	252		CEJA4R7M35
C	253		CEJA4R7M35
C	254		CEJA4R7M35
C	255		CKSQYB221K50
C	256		CKSQYB221K50
C	301		CEJA100M16
C	302		CEJA100M16
C	501		CCSQCH150K50
C	502		CCSQCH150K50
C	503		CKSQYB103K50
C	504		CKSQYB103K50
C	505		CCSQCH101K50
C	506		CKSQYB103K50
C	507		CKSQYB103K50
C	508		CKSQYB102K50
C	509		CEJA220M10
C	512		CKSQYB223K50
C	514		CKSQYB473K16
C	515		CEJA220M6R3
C	516		CKSQYB103K50
C	517		CEJA220M6R3
C	518		CKSQYB103K50
C	522		CKSQYB103K50
C	523		CKLSR473K16
C	525	4.7µF/16V	CCH1250
C	526		CKSQYB103K50
C	529		CCSQCH101K50
C	530		CKSQYB223K50
C	532		CKSQYB473K16
C	533		CKSYB154K25
C	534		CCSQCH101K50
C	601		CCSQCH200J50
C	602		CCSQCH200J50
C	603		CEJA4R7M35
C	604		CCSQCH101J50
C	605		CCSQCH101J50
C	606		CCSQCH101K50
C	607		CCSQCH101K50
C	608		CCSQCH101K50
C	651		CCSQCH821J50
C	652		CCSQCH821J50
C	653		CCSQCH101J50
C	802		CKSQYB104K25
C	803		CEJA100M16
C	804		CKSQYB103K50
C	805		CEJA100M16
C	806		CKSQYB103K50
C	807		CKSQYB333K25

=====Circuit Symbol and No.		===Part Name	Part No.
C	808		CKSQYB333K25
C	853		CKSQYB103K50
C	856		CKSQYB473K25
C	911		CKSQYB103K50
C	912		CEJA470M10
C	913		CKSQYB472K50
C	914	1000µF/16V	CCH1312
C	921		CKSYB105K16
C	922		CKSQYB102K50
C	941		CEJA2R2M50
C	942		CKSQYB102K50
C	951		CKSQYB103K50
C	952		CEJA101M10
C	953	330µF/10V	CCH1181
C	971		CKSQYB473K25
C	972		CKSQYB102K50
C	973		CEJA101M10

A Unit Number : CWM5629
Unit Name : Tuner Amp Unit(DEH-41/UC)

MISCELLANEOUS

IC	151	IC	SN761027DL
IC	201	IC	TDA7384
IC	501	IC	PM2006A
IC	601	IC	PD4886A
IC	941	IC	S-80730ANDT
Q	201	Transistor	DTC144EK
Q	253	Transistor	IMD2A
Q	254	Transistor	IMH3A
Q	501	Transistor	2SC2712
Q	601	Transistor	DTA114EK
Q	602	Transistor	DTC114EK
Q	801	Chip Transistor	2SA1162
Q	802	Transistor	2SD1760F5
Q	803	Transistor	DTC114EK
Q	804	Transistor	DTA143EK
Q	805	Transistor	DTC114EK
Q	806	Transistor	2SC2712
Q	807	Transistor	2SB1238
Q	808	Transistor	DTC123EK
Q	809	Transistor	2SD1864
Q	911	Transistor	2SD1760F5
Q	912	Transistor	IMD2A
Q	913	Transistor	DTA114EK
Q	921	Transistor	IMX1
Q	922	Transistor	DTC114EK
Q	923	Transistor	2SC2712
Q	951	Transistor	2SD2396
Q	952	Transistor	2SB1243
Q	953	Transistor	DTC124EK
Q	954	Transistor	2SA1674
Q	955	Transistor	2SA1674
Q	956	Transistor	IMH1A
Q	957	Transistor	2SC2712
Q	971	Transistor	2SD2396
Q	972	Transistor	IMD2A
D	201	Diode	DAN202K
D	251	Diode	1SS133
D	501	Diode	MA152WK
D	801	Diode	DA204K
D	802	Diode	DA204K
D	803	Diode	DA204K
D	804	Diode	MA3062(M)
D	805	Diode	MA3075(L)
D	806	Diode	MA3039(H)
D	901	Diode	ERA15-02VH

Circuit Symbol and No.	Part Name	Part No.
D 902	Diode	ERA15-02VH
D 911	Diode	ERA15-02VH
D 912	Diode	HZS6L(B1)
D 921	Diode	HZS7L(C3)
D 922	Diode	ERA15-02VH
D 923	Diode	HZS7L(A1)
D 931	Diode	ERA15-02VH
D 932	Diode	ERA15-02VH
D 951	Diode	HZS9L(B3)
D 952	Diode	HZS9L(A2)
D 953	Diode	1SS133
D 971	Diode	HZS9L(B1)
L 501	Ferri-Inductor	LAU2R2K
L 502	Ferri-Inductor	LAU2R2K
L 503	Ferri-Inductor	LAU2R2K
L 601	Inductor	LAU100K
L 602	Ferri-Inductor	LAU2R2K
L 603	Ferri-Inductor	LAU2R2K
L 801	Ferri-Inductor	LAU2R2K
L 802	Transformer	MTX9006
TH 601	Thermistor	CCX1037
X 501	Crystal Resonator 7.200MHz	CSS1379
X 601	Resonator 15.58291MHz	CSS1402
	FM/AM Tuner Unit	CWE1417
BZ 601	Buzzer	CPV1011

RESISTORS

Circuit Symbol and No.	Part Name	Part No.
R 115		RS1/10S473J
R 133		RS1/10S162J
R 134		RS1/10S162J
R 141		RS1/10S0R0J
R 142		RS1/10S0R0J
R 151		RS1/10S272J
R 152		RS1/10S272J
R 153		RS1/10S151J
R 154		RS1/10S151J
R 155		RS1/10S102J
R 201		RS1/10S103J
R 202		RS1/10S331J
R 203		RS1/10S103J
R 204		RS1/10S103J
R 259		RS1/10S681J
R 260		RS1/10S681J
R 265		RS1/10S223J
R 266		RS1/10S223J
R 268		RS1/10S0R0J
R 269		RS1/10S0R0J
R 301		RS1/10S151J
R 302		RS1/10S151J
R 351		RS1/10S0R0J
R 352		RS1/10S0R0J
R 353		RS1/10S0R0J
R 354		RS1/10S0R0J
R 501		RS1/10S0R0J
R 502		RS1/10S222J
R 503		RS1/10S222J
R 504		RS1/10S102J
R 505		RS1/10S222J
R 506		RS1/10S152J
R 507		RS1/10S472J
R 508		RS1/10S472J
R 509		RS1/10S472J
R 510		RS1/10S182J
R 511		RS1/10S103J
R 513		RS1/10S0R0J
R 514		RS1/10S392J
R 515		RS1/10S392J
R 516		RS1/10S152J
R 517		RS1/10S102J
R 518		RS1/10S102J
R 519		RS1/10S102J
R 520		RS1/10S103J
R 522		RS1/10S562J
R 523		RS1/10S472J
R 526		RS1/10S0R0J
R 528		RS1/10S0R0J
R 601		RS1/10S102J
R 602		RS1/10S473J
R 604		RS1/10S473J
R 605		RS1/10S473J
R 606		RS1/10S473J
R 607		RS1/10S473J
R 608		RS1/10S473J
R 609		RS1/10S473J
R 610		RS1/10S222J
R 611		RS1/10S222J
R 612		RS1/10S222J
R 613		RS1/10S393J
R 614		RS1/10S473J
R 615		RN1/10SE2002D
R 616		RS1/10S473J
R 617		RS1/10S473J
R 618		RS1/10S473J
R 620		RS1/10S0R0J
R 621		RS1/10S202J
R 622		RS1/10S102J
R 623		RS1/10S473J
R 624		RS1/10S473J
R 625		RS1/10S681J
R 626		RS1/10S102J
R 627		RA3C681J
R 630		RS1/10S473J
R 631		RS1/10S473J
R 632		RS1/10S393J
R 633		RS1/10S0R0J
R 634		RS1/10S0R0J
R 636		RS1/10S473J
R 639		RS1/10S473J
R 651		RS1/10S681J
R 652		RS1/10S681J
R 653		RS1/10S681J
R 654		RS1/10S681J
R 753		RS1/10S473J
R 801		RS1/8S222J
R 802		RS1/8S222J
R 803		RS1/8S222J
R 804		RS1/10S132J
R 805		RS1/10S822J
R 806		RS2PMF100J
R 807		RD1/4PU471J
R 808		RS1/10S223J
R 809		RS1/10S682J
R 810		RS1/10S103J
R 811		RS1/10S224J
R 812		RS1/10S104J
R 813		RS2PMF220J
R 814		RS1/10S222J
R 815		RD1/4PU152J
R 852		RS1/10S473J
R 866		RS1/10S473J
R 867		RS1/10S473J
R 911		RS1/10S752J

Circuit Symbol and No.		Part Name	Part No.
R	912		RS1/10S101J
R	913		RS1/10S392J
R	921		RS1/10S103J
R	922		RS1/10S473J
R	923		RS1/10S103J
R	924		RS1/10S103J
R	925		RS1/10S473J
R	926		RS1/10S472J
R	927		RS1/10S224J
R	941		RS1/10S102J
R	942		RS1/10S822J
R	951		RD1/4PU221J
R	952		RD1/4PU511J
R	953		RS1/10S1R0J
R	954		RD1/4PU331J
R	955		RD1/4PU331J
R	956		RS1/10S472J
R	957		RD1/4PU102J
R	958		RS1/10S472J
R	959		RD1/4PU102J
R	960		RS1/10S472J
R	961		RS1/10S103J
R	962		RS1/10S473J
R	963		RS1/10S473J
R	971		RD1/4PU221J
R	972		RS1/10S221J
R	973		RS1/10S472J
R	974		RS1/10S222J
CAPACITORS			
C	133		CKSQYB473K16
C	134		CKSQYB473K16
C	135		CEJA4R7M35
C	136		CEJA4R7M35
C	137		CEJA2R2M50
C	138		CEJA2R2M50
C	151		CKSQYB473K25
C	152		CEJA470M10
C	153		CEJANP100M16
C	154		CEJANP100M16
C	155		CKSQYB822K50
C	156		CKSQYB822K50
C	157		CEJA1R0M50
C	158		CEJA1R0M50
C	159		CKSQYB183K50
C	160		CKSQYB183K50
C	161		CKSQYB102K50
C	162		CKSQYB102K50
C	163		CEJANP2R2M35
C	164		CEJANP2R2M35
C	165		CKSQYB333K25
C	166		CKSQYB333K25
C	167		CEJA220M16
C	168		CEJA2R2M50
C	169		CKSQYB104K25
C	170		CCSQCH101K50
C	201		CKSQYB224K16
C	202		CKSQYB224K16
C	203		CKSQYB224K16
C	204		CKSQYB224K16
C	205		CEJA1R0M50
C	206	3300µF/16V	CCH1150
C	207		CKSQYB473K50
C	208		CEJA100M16
C	209		CEJA1R0M50

Circuit Symbol and No.		Part Name	Part No.
C	210		CEJA330M16
C	253		CEJA4R7M35
C	254		CEJA4R7M35
C	501		CCSQCH150K50
C	502		CCSQCH150K50
C	503		CKSQYB103K50
C	504		CKSQYB103K50
C	505		CCSQCH101K50
C	506		CKSQYB103K50
C	507		CKSQYB103K50
C	508		CKSQYB102K50
C	509		CEJA220M10
C	512		CKSQYB223K50
C	514		CKSQYB473K16
C	515		CEJA220M6R3
C	516		CKSQYB103K50
C	517		CEJA220M6R3
C	518		CKSQYB103K50
C	522		CKSQYB103K50
C	523		CKLSR473K16
C	525	4.7µF/16V	CCH1250
C	526		CKSQYB103K50
C	529		CCSQCH101K50
C	530		CKSQYB223K50
C	532		CKSQYB473K16
C	533		CKSYB154K25
C	534		CCSQCH101K50
C	601		CCSQCH200J50
C	602		CCSQCH200J50
C	603		CEJA4R7M35
C	604		CCSQCH101J50
C	605		CCSQCH101J50
C	606		CCSQCH101K50
C	607		CCSQCH101K50
C	608		CCSQCH101K50
C	651		CCSQCH821J50
C	652		CCSQCH821J50
C	653		CCSQCH101J50
C	802		CKSQYB104K25
C	803		CEJA100M16
C	804		CKSQYB103K50
C	805		CEJA100M16
C	806		CKSQYB103K50
C	807		CKSQYB333K25
C	808		CKSQYB333K25
C	911		CKSQYB103K50
C	912		CEJA470M10
C	913		CKSQYB472K50
C	914	1000µF/16V	CCH1312
C	921		CKSYB105K16
C	922		CKSQYB102K50
C	941		CEJA2R2M50
C	942		CKSQYB102K50
C	951		CKSQYB103K50
C	952		CEJA101M10
C	953	330µF/10V	CCH1181
C	971		CKSQYB473K25
C	972		CKSQYB102K50
C	973		CEJA101M10

=====Circuit Symbol and No.	Part Name	Part No.
KEYBOARD UNIT Consists of Keyboard PCB Switch PCB		
C F	Unit Number : CWM5634 Unit Name : Keyboard Unit(DEH-P645/UC)	
MISCELLANEOUS		
IC 1801	IC	PD6197A
IC 1802		RS-140
D 1801	Diode	DA204K
D 1802	Diode	DA204K
D 1821	LED	CL220PGC
D 1822	LED	CL220PGC
D 1825	LED	CL170PGCD
D 1826	LED	CL170PGCD
D 1827	LED	CL170PGCD
D 1828	LED	CL170PGCD
D 1829	LED	CL170PGCD
D 1830	LED	CL170PGCD
D 1831	LED	CL170PGCD
D 1832	LED	CL170PGCD
D 1833	LED	CL170PGCD
D 1834	LED	CL170PGCD
D 1836	LED	CL170PGCD
D 1837	LED	CL170PGCD
D 1838	LED	CL170PGCD
D 1839	LED	CL170PGCD
D 1840	LED	CL170PGCD
D 1841	LED	CL170PGCD
D 1842	LED	CL170PGCD
D 1843	LED	CL170PGCD
X 1801	Resonator 5.00MHz	CSS1423
S 801	Switch	CSN1027
S 1801		CSG1085
S 1802		CSG1086
S 1803	Switch	CSG1041
S 1804		CSG1084
S 1805		CSG1086
S 1806	Switch	CSG1041
S 1807	Switch	CSG1041
S 1808	Switch	CSG1041
S 1809		CSG1085
S 1810		CSG1084
S 1811		CSG1085
S 1812	Switch	CSG1041
S 1813	Switch	CSG1041
S 1814	Switch	CSG1041
S 1815		CSG1061
S 1816	Switch	CSG1041
S 1817	Switch	CSG1041
S 1818	Switch	CSG1041
S 1819	Switch	CSG1041
S 1820	Switch	CSG1041
S 1821	Switch	CSG1041
	LCD	CAW1479
RESISTORS		
R 1801		RS1/8S222J
R 1802		RS1/8S222J
R 1803		RS1/10S472J
R 1804		RS1/10S121J
R 1805		RS1/10S2R2J
R 1812		RS1/10S0R0J
R 1815		RS1/10S0R0J
R 1816		RS1/10S0R0J
R 1821		RS1/8S101J
R 1822		RS1/8S181J
R 1823		RS1/8S101J
R 1824		RS1/8S181J
R 1825		RS1/8S101J
R 1826		RS1/8S181J
R 1827		RS1/8S101J
R 1828		RS1/8S121J
R 1829		RS1/8S101J
R 1830		RS1/8S181J
R 1831		RS1/8S201J
R 1832		RS1/8S221J
R 1833		RS1/8S101J
R 1834		RS1/8S181J
R 1835		RS1/8S101J
R 1836		RS1/8S181J
R 1837		RS1/8S101J
R 1838		RS1/8S181J
R 1839		RS1/8S101J
R 1840		RS1/8S181J
CAPACITORS		
C 1801		CKSQYB104K50
C 1802		CEV100M16
C 1803		CKSQYB104K25
C 1804		CKSQYB104K25
C 1805		CKSQYB104K50
C 1806		CKSQYB104K25

=====Circuit Symbol and No.	Part Name	Part No.
KEYBOARD UNIT Consists of Keyboard PCB Switch PCB		
C F	Unit Number : CWM5636 Unit Name : Keyboard Unit(DEH-P56/UC)	
MISCELLANEOUS		
IC 1801	IC	PD6197A
IC 1802		RS-140
D 1801	Diode	DA204K
D 1802	Diode	DA204K
D 1821	LED	CL220PGC
D 1822	LED	CL220PGC
D 1825	LED	CL170PGCD
D 1826	LED	CL170PGCD
D 1827	LED	CL170PGCD
D 1828	LED	CL170PGCD
D 1829	LED	CL170PGCD
D 1830	LED	CL170PGCD
D 1831	LED	CL170PGCD
D 1832	LED	CL170PGCD
D 1833	LED	CL170PGCD
D 1834	LED	CL170PGCD
D 1836	LED	CL170PGCD
D 1837	LED	CL170PGCD
D 1838	LED	CL170PGCD
D 1839	LED	CL170PGCD
D 1840	LED	CL170PGCD
D 1841	LED	CL170PGCD
D 1842	LED	CL170PGCD
D 1843	LED	CL170PGCD
X 1801	Resonator 5.00MHz	CSS1423

Circuit Symbol and No.	Part Name	Part No.
S 801	Switch	CSN1027
S 1801		CSG1085
S 1802		CSG1086
S 1803	Switch	CSG1041
S 1804		CSG1084
S 1805		CSG1086
S 1806	Switch	CSG1041
S 1807	Switch	CSG1041
S 1808	Switch	CSG1041
S 1809		CSG1085
S 1810		CSG1084
S 1811		CSG1085
S 1812	Switch	CSG1041
S 1813	Switch	CSG1041
S 1814	Switch	CSG1041
S 1815		CSG1061
S 1816	Switch	CSG1041
S 1817	Switch	CSG1041
S 1818	Switch	CSG1041
S 1819	Switch	CSG1041
S 1820	Switch	CSG1041
S 1821	Switch	CSG1041
	LCD	CAW1459

RESISTORS

R 1801		RS1/8S222J
R 1802		RS1/8S222J
R 1803		RS1/10S472J
R 1804		RS1/10S121J
R 1805		RS1/10S2R2J
R 1813		RS1/10S0R0J
R 1814		RS1/10S0R0J
R 1816		RS1/10S0R0J
R 1821		RS1/8S101J
R 1822		RS1/8S181J
R 1823		RS1/8S101J
R 1824		RS1/8S181J
R 1825		RS1/8S101J
R 1826		RS1/8S181J
R 1827		RS1/8S101J
R 1828		RS1/8S121J
R 1829		RS1/8S101J
R 1830		RS1/8S181J
R 1831		RS1/8S201J
R 1832		RS1/8S221J
R 1833		RS1/8S101J
R 1834		RS1/8S181J
R 1835		RS1/8S101J
R 1836		RS1/8S181J
R 1837		RS1/8S101J
R 1838		RS1/8S181J
R 1839		RS1/8S101J
R 1840		RS1/8S181J

CAPACITORS

C 1801		CKSQYB104K50
C 1802		CEV100M16
C 1803		CKSQYB104K25
C 1804		CKSQYB104K25
C 1805		CKSQYB104K50
C 1806		CKSQYB104K25

Circuit Symbol and No.	Part Name	Part No.

KEYBOARD UNIT
Consists of
Keyboard PCB
Switch PCB

C F Unit Number : CWM5636
Unit Name : Keyboard Unit(DEH-P545/UC)

MISCELLANEOUS

IC 1801	IC	PD6197A
IC 1802		RS-140
D 1801	Diode	DA204K
D 1802	Diode	DA204K
D 1821	LED	CL220PGC
D 1822	LED	CL220PGC
D 1825	LED	CL170PGCD
D 1826	LED	CL170PGCD
D 1827	LED	CL170PGCD
D 1828	LED	CL170PGCD
D 1829	LED	CL170PGCD
D 1830	LED	CL170PGCD
D 1831	LED	CL170PGCD
D 1832	LED	CL170PGCD
D 1833	LED	CL170PGCD
D 1834	LED	CL170PGCD
D 1836	LED	CL170PGCD
D 1837	LED	CL170PGCD
D 1838	LED	CL170PGCD
D 1839	LED	CL170PGCD
D 1840	LED	CL170PGCD
D 1841	LED	CL170PGCD
D 1842	LED	CL170PGCD
D 1843	LED	CL170PGCD
X 1801	Resonator 5.00MHz	CSS1423
S 801	Switch	CSN1027
S 1801		CSG1085
S 1802		CSG1086
S 1803	Switch	CSG1041
S 1804		CSG1084
S 1805		CSG1086
S 1806	Switch	CSG1041
S 1807	Switch	CSG1041
S 1808	Switch	CSG1041
S 1809		CSG1085
S 1810		CSG1084
S 1811		CSG1085
S 1812	Switch	CSG1041
S 1813	Switch	CSG1041
S 1814	Switch	CSG1041
S 1815		CSG1061
S 1816	Switch	CSG1041
S 1817	Switch	CSG1041
S 1818	Switch	CSG1041
S 1819	Switch	CSG1041
S 1820	Switch	CSG1041
S 1821	Switch	CSG1041
	LCD	CAW1459

RESISTORS

R 1801		RS1/8S222J
R 1802		RS1/8S222J
R 1803		RS1/10S472J
R 1804		RS1/10S121J
R 1805		RS1/10S2R2J

Circuit Symbol and No.	Part Name	Part No.
R 1813		RS1/10S0R0J
R 1814		RS1/10S0R0J
R 1816		RS1/10S0R0J
R 1821		RS1/8S101J
R 1822		RS1/8S181J
R 1823		RS1/8S101J
R 1824		RS1/8S181J
R 1825		RS1/8S101J
R 1826		RS1/8S181J
R 1827		RS1/8S101J
R 1828		RS1/8S121J
R 1829		RS1/8S101J
R 1830		RS1/8S181J
R 1831		RS1/8S201J
R 1832		RS1/8S221J
R 1833		RS1/8S101J
R 1834		RS1/8S181J
R 1835		RS1/8S101J
R 1836		RS1/8S181J
R 1837		RS1/8S101J
R 1838		RS1/8S181J
R 1839		RS1/8S101J
R 1840		RS1/8S181J

CAPACITORS

C 1801		CKSQYB104K50
C 1802		CEV100M16
C 1803		CKSQYB104K25
C 1804		CKSQYB104K25
C 1805		CKSQYB104K50
C 1806		CKSQYB104K25

KEYBOARD UNIT
Consists of
Keyboard PCB
Switch PCB

C F Unit Number : CWM5640
Unit Name : Keyboard Unit(DEH-46/UC)

MISCELLANEOUS

IC	1801	IC	PD6197A
IC	1802		RS-140
D	1801	Diode	DA204K
D	1802	Diode	DA204K
D	1821	LED	CL220PGC
D	1822	LED	CL220PGC
D	1825	LED	CL170PGCD
D	1827	LED	CL170PGCD
D	1828	LED	CL170PGCD
D	1829	LED	CL170PGCD
D	1831	LED	CL170PGCD
D	1832	LED	CL170PGCD
D	1834	LED	CL170PGCD
D	1836	LED	CL170PGCD
D	1837	LED	CL170PGCD
D	1838	LED	CL170PGCD
D	1839	LED	CL170PGCD
D	1840	LED	CL170PGCD
D	1841	LED	CL170PGCD
D	1842	LED	CL170PGCD
D	1843	LED	CL170PGCD
X	1801	Resonator 5.00MHz	CSS1423
S	801	Switch	CSN1027
S	1801		CSG1085
S	1802		CSG1086

Circuit Symbol and No.	Part Name	Part No.
S 1803	Switch	CSG1041
S 1804		CSG1084
S 1805	Push Switch	CSG1084
S 1806	Switch	CSG1041
S 1807	Switch	CSG1041
S 1808	Switch	CSG1041
S 1809		CSG1085
S 1810		CSG1084
S 1811		CSG1085
S 1812	Switch	CSG1041
S 1813	Switch	CSG1041
S 1814	Switch	CSG1041
S 1815		CSG1061
S 1816	Switch	CSG1041
S 1817	Switch	CSG1041
S 1818	Switch	CSG1041
S 1819	Switch	CSG1041
S 1820	Switch	CSG1041
S 1821	Switch	CSG1041
	LCD	CAW1479

RESISTORS

R 1801		RS1/8S222J
R 1802		RS1/8S222J
R 1803		RS1/10S472J
R 1804		RS1/10S121J
R 1805		RS1/10S2R2J
R 1813		RS1/10S0R0J
R 1814		RS1/10S0R0J
R 1816		RS1/10S0R0J
R 1821		RS1/8S201J
R 1822		RS1/8S221J
R 1823		RS1/8S201J
R 1824		RS1/8S221J
R 1825		RS1/8S201J
R 1826		RS1/8S221J
R 1827		RS1/8S101J
R 1828		RS1/8S121J
R 1829		RS1/8S101J
R 1830		RS1/8S181J
R 1831		RS1/8S201J
R 1832		RS1/8S221J
R 1833		RS1/8S101J
R 1834		RS1/8S181J
R 1835		RS1/8S101J
R 1836		RS1/8S181J
R 1837		RS1/8S101J
R 1838		RS1/8S181J
R 1839		RS1/8S201J
R 1840		RS1/8S221J
R 1841		RS1/10S0R0J
R 1842		RS1/10S0R0J
R 1843		RS1/10S0R0J
R 1845		RS1/10S0R0J

CAPACITORS

C 1801		CKSQYB104K50
C 1802		CEV100M16
C 1803		CKSQYB104K25
C 1804		CKSQYB104K25
C 1805		CKSQYB104K50
C 1806		CKSQYB104K25

=====Circuit Symbol and No.	Part Name	Part No.
KEYBOARD UNIT Consists of Keyboard PCB Switch PCB		
C F Unit Number : CWM5640 Unit Name : Keyboard Unit(DEH-445/UC)		
MISCELLANEOUS		
IC 1801	IC	PD6197A
IC 1802		RS-140
D 1801	Diode	DA204K
D 1802	Diode	DA204K
D 1821	LED	CL220PGC
D 1822	LED	CL220PGC
D 1825	LED	CL170PGCD
D 1827	LED	CL170PGCD
D 1828	LED	CL170PGCD
D 1829	LED	CL170PGCD
D 1831	LED	CL170PGCD
D 1832	LED	CL170PGCD
D 1834	LED	CL170PGCD
D 1836	LED	CL170PGCD
D 1837	LED	CL170PGCD
D 1838	LED	CL170PGCD
D 1839	LED	CL170PGCD
D 1840	LED	CL170PGCD
D 1841	LED	CL170PGCD
D 1842	LED	CL170PGCD
D 1843	LED	CL170PGCD
X 1801	Resonator 5.00MHz	CSS1423
S 801	Switch	CSN1027
S 1801		CSG1085
S 1802		CSG1086
S 1803	Switch	CSG1041
S 1804		CSG1084
S 1805	Push Switch	CSG1084
S 1806	Switch	CSG1041
S 1807	Switch	CSG1041
S 1808	Switch	CSG1041
S 1809		CSG1085
S 1810		CSG1084
S 1811		CSG1085
S 1812	Switch	CSG1041
S 1813	Switch	CSG1041
S 1814	Switch	CSG1041
S 1815		CSG1061
S 1816	Switch	CSG1041
S 1817	Switch	CSG1041
S 1818	Switch	CSG1041
S 1819	Switch	CSG1041
S 1820	Switch	CSG1041
S 1821	Switch	CSG1041
	LCD	CAW1479
RESISTORS		
R 1801		RS1/8S222J
R 1802		RS1/8S222J
R 1803		RS1/10S472J
R 1804		RS1/10S121J
R 1805		RS1/10S2R2J
R 1813		RS1/10S0R0J
R 1814		RS1/10S0R0J
R 1816		RS1/10S0R0J
R 1821		RS1/8S201J
R 1822		RS1/8S221J

=====Circuit Symbol and No.	Part Name	Part No.
R 1823		RS1/8S201J
R 1824		RS1/8S221J
R 1825		RS1/8S201J
R 1826		RS1/8S221J
R 1827		RS1/8S101J
R 1828		RS1/8S121J
R 1829		RS1/8S101J
R 1830		RS1/8S181J
R 1831		RS1/8S201J
R 1832		RS1/8S221J
R 1833		RS1/8S101J
R 1834		RS1/8S181J
R 1835		RS1/8S101J
R 1836		RS1/8S181J
R 1837		RS1/8S101J
R 1838		RS1/8S181J
R 1839		RS1/8S201J
R 1840		RS1/8S221J
R 1841		RS1/10S0R0J
R 1842		RS1/10S0R0J
R 1843		RS1/10S0R0J
R 1845		RS1/10S0R0J
CAPACITORS		
C 1801		CKSQYB104K50
C 1802		CEV100M16
C 1803		CKSQYB104K25
C 1804		CKSQYB104K25
C 1805		CKSQYB104K50
C 1806		CKSQYB104K25
KEYBOARD UNIT Consists of Keyboard PCB Switch PCB		
C F Unit Number : CWM5640 Unit Name : Keyboard Unit(DEH-41/UC)		
MISCELLANEOUS		
IC 1801	IC	PD6197A
IC 1802		RS-140
D 1801	Diode	DA204K
D 1802	Diode	DA204K
D 1821	LED	CL220PGC
D 1822	LED	CL220PGC
D 1825	LED	CL170PGCD
D 1827	LED	CL170PGCD
D 1828	LED	CL170PGCD
D 1829	LED	CL170PGCD
D 1831	LED	CL170PGCD
D 1832	LED	CL170PGCD
D 1834	LED	CL170PGCD
D 1836	LED	CL170PGCD
D 1837	LED	CL170PGCD
D 1838	LED	CL170PGCD
D 1839	LED	CL170PGCD
D 1840	LED	CL170PGCD
D 1841	LED	CL170PGCD
D 1842	LED	CL170PGCD
D 1843	LED	CL170PGCD
X 1801	Resonator 5.00MHz	CSS1423
S 801	Switch	CSN1027
S 1801		CSG1085
S 1802		CSG1086

=====Circuit Symbol and No.		===Part Name	Part No.
S	1803	Switch	CSG1041
S	1804		CSG1084
S	1805	Push Switch	CSG1084
S	1806	Switch	CSG1041
S	1807	Switch	CSG1041
S	1808	Switch	CSG1041
S	1809		CSG1085
S	1810		CSG1084
S	1811		CSG1085
S	1812	Switch	CSG1041
S	1813	Switch	CSG1041
S	1814	Switch	CSG1041
S	1815		CSG1061
S	1816	Switch	CSG1041
S	1817	Switch	CSG1041
S	1818	Switch	CSG1041
S	1819	Switch	CSG1041
S	1820	Switch	CSG1041
S	1821	Switch	CSG1041
		LCD	CAW1479

RESISTORS

R	1801		RS1/8S222J
R	1802		RS1/8S222J
R	1803		RS1/10S472J
R	1804		RS1/10S121J
R	1805		RS1/10S2R2J
R	1813		RS1/10S0R0J
R	1814		RS1/10S0R0J
R	1816		RS1/10S0R0J
R	1821		RS1/8S201J
R	1822		RS1/8S221J
R	1823		RS1/8S201J
R	1824		RS1/8S221J
R	1825		RS1/8S201J
R	1826		RS1/8S221J
R	1827		RS1/8S101J
R	1828		RS1/8S121J
R	1829		RS1/8S101J
R	1830		RS1/8S181J
R	1831		RS1/8S201J
R	1832		RS1/8S221J
R	1833		RS1/8S101J
R	1834		RS1/8S181J
R	1835		RS1/8S101J
R	1836		RS1/8S181J
R	1837		RS1/8S101J
R	1838		RS1/8S181J
R	1839		RS1/8S201J
R	1840		RS1/8S221J
R	1841		RS1/10S0R0J
R	1842		RS1/10S0R0J
R	1843		RS1/10S0R0J
R	1845		RS1/10S0R0J

CAPACITORS

C	1801		CKSQYB104K50
C	1802		CEV100M16
C	1803		CKSQYB104K25
C	1804		CKSQYB104K25
C	1805		CKSQYB104K50
C	1806		CKSQYB104K25

=====Circuit Symbol and No.		===Part Name	Part No.
E		Unit Number :	
		Unit Name : Photo Unit	
Q	1	Photo-transistor	CPT-230S-X
Q	2	Photo-transistor	CPT-230S-X

Miscellaneous Parts List

		Pickup Unit(Service)	CXX1230
M	1	Motor Unit	CXA8912
M	2	CRG Motor Unit	CXA8986
M	3	Load Motor Unit	CXA8702

6. ADJUSTMENT

6.1 TUNER ADJUSTMENT

● Connection Diagram

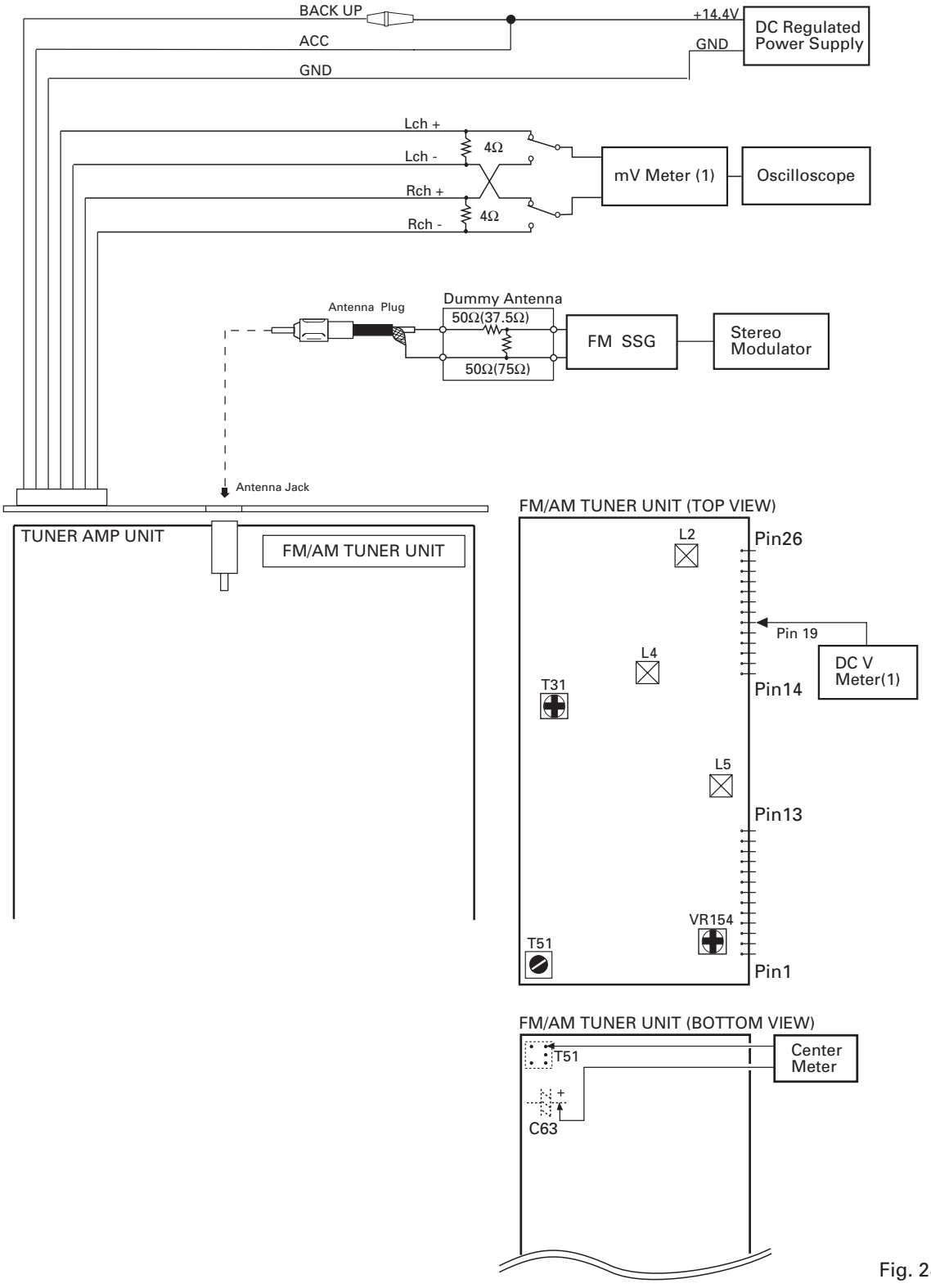

Fig. 24

FM ADJUSTMENT

Modulation M:MONO MOD., 400Hz 30%(22.5kHz Dev.)
S:STEREO MOD., 1kHz, L or R=30%(20.25kHz+7.5kHz Dev.)

NOTE:Before proceeding to further adjustments after switching power ON, let the tuner run for ten minutes to allow the circuits to stabilize.

	No.	FM SSG		Displayed	Adjustment	Adjustment Method
		Frequency(MHz)	Level(dBf)	Frequency(MHz)	Point	(Switch Position)
TUN Volt	1	•••••	•••••	108.0	L5	DC V Meter(1) : 6V
IF	1	98.1 M	60	98.1	T51	Center Meter : 0
ANT Coil	1	98.1 M	5	98.1	L2	mV Meter(1) : Maximum
RF Coil	1	98.1 M	5	98.1	L4	mV Meter(1) : Maximum
IFT	1	98.1 M	5	98.1	T31	mV Meter(1) : Maximum (STEREO MODE)
ARC	1	98.1 S	39	98.1	VR154	mV Meter(1) : Separation 5dB (STEREO MODE)

6.2 CD SECTION

1)Precautions

• This unit uses a single power supply (+5V) for the regulator. The signal reference potential, therefore, is connected to REFO(approx. 2.5V) instead of GND.
If REFO and GND are connected to each other by mistake during adjustments, not only will it be impossible to measure the potential correctly, but the servo will malfunction and a severe shock will be applied to the pick-up. To avoid this, take special note of the following.
Do not connect the negative probe of the measuring equipment to REFO and GND together. It is especially important not to connect the channel 1 negative probe of the oscilloscope to REFO with the channel 2 negative probe connected to GND.
Since the frame of the measuring instrument is usually at the same potential as the negative probe, change the frame of the measuring instrument to floating status.
If by accident REFO comes in contact with GND, immediately switch the regulator or power OFF.

• Always make sure the regulator is OFF when connecting and disconnecting the various filters and wiring required for measurements.

• Before proceeding to further adjustments and measurements after switching regulator ON, let the player run for about one minute to allow the circuits to stabilize.

• Since the protective systems in the unit's software are rendered inoperative in test mode, be very careful to avoid mechanical and /or electrical shocks to the system when making adjustment.

• Test mode starting procedure
Switch ACC, back-up ON while pressing the **4** and **6** keys together.

• Test mode cancellation
Switch ACC, back-up OFF.

• Disc detection during loading and eject operations is performed by means of a photo transistor in this unit.Consequently, if the inside of the unit is exposed to a strong light source when the outer casing is removed for repairs or adjustment, the following malfunctions may occur.
*During PLAY, even if the eject button is pressed,the disc will not be ejected and the unit will remain in the PLAY mode.
*The unit will not load a disc.
When the unit malfunctions this way, either re-position the light source, move the unit or cover the photo transistor.

• When loading and unloading discs during adjustment procedures, always wait for the disc to be properly clamped or ejected before pressing another key. Otherwise, there is a risk of the actuator being destroyed.

• Turn power off when pressing the button → or the button ← key for focus search in the test mode. (Or else lens may stick and the actuator may be damaged.)

• SINGLE/4TRK/10TRK/32TRK will continue to operate even after the key is released.Tracking is closed the moment C-MOVE is released.

• JUMP MODE resets to SINGLE as soon as power is switched OFF.

● Flow Chart

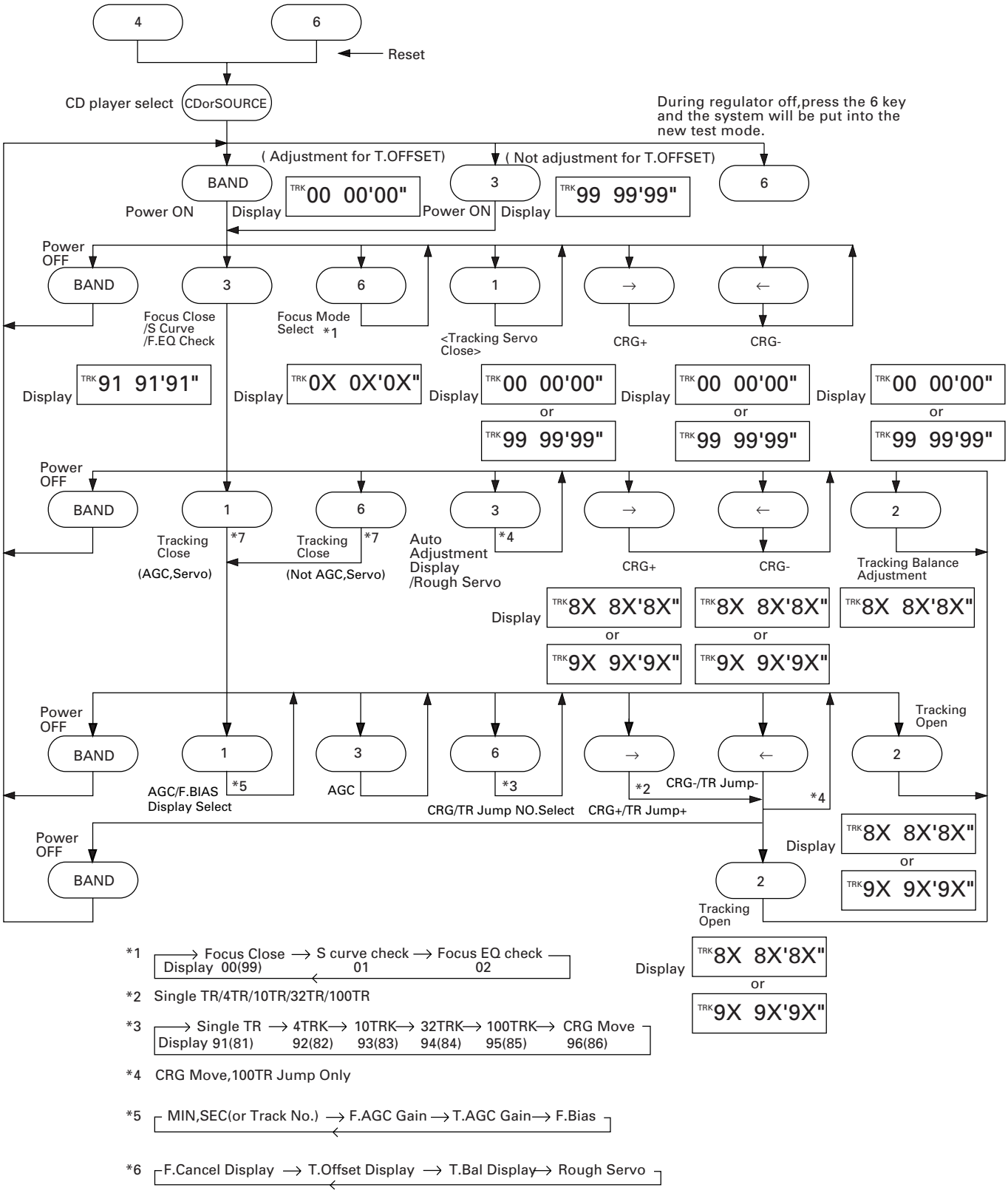

*1 → Focus Close → S curve check → Focus EQ check
Display 00(99) 01 02

*2 Single TR/4TR/10TR/32TR/100TR

*3 → Single TR → 4TRK → 10TRK → 32TRK → 100TRK → CRG Move
Display 91(81) 92(82) 93(83) 94(84) 95(85) 96(86)

*4 CRG Move,100TR Jump Only

*5 MIN,SEC(or Track No.) → F.AGC Gain → T.AGC Gain → F.Bias

*6 F.Cancel Display → T.Offset Display → T.Bal Display → Rough Servo

6.3 CHECKING THE GRATING AFTER CHANGING THE PICKUP UNIT

• **Note :**
Unlike previous CD mechanism modules the grating angle of the PU unit cannot be adjusted after the PU unit is changed. The PU unit in the CD mechanism module is adjusted on the production line to match the CD mechanism module and is thus the best adjusted PU unit for the CD mechanism module. Changing the PU unit is thus best considered as a last resort. However, if the PU unit must be changed, the grating should be checked using the procedure below.

• **Purpose :**
To check that the grating is within an acceptable range.

• **Symptoms of Mal-adjustment :**
If the grating is off by a large amount symptoms such as being unable to close tracking, being unable to perform track search operations, or track searching taking a long time, may appear.

• **Method :**

• Measuring Equipment	• Oscilloscope, Two L.P.F.
• Measuring Points	• E, F, REFOUT
• Disc	• ABEX TCD-784
• Mode	• TEST MODE

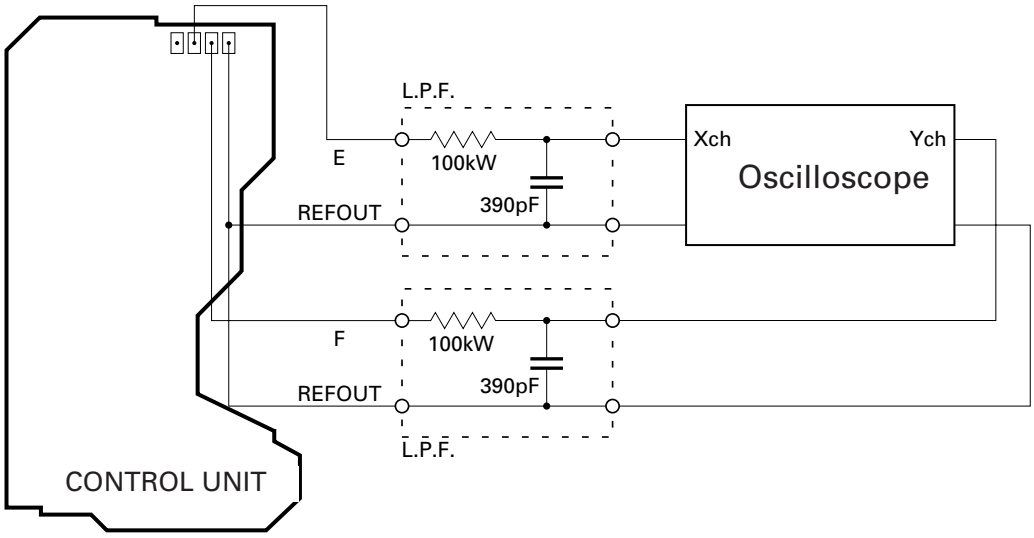

• **Checking Procedure**
1. In test mode, load the disc and switch the 5V regulator on.
2. Using the → and ← buttons, move the PU unit to the innermost track.
3. Press key **3** to close focus, the display should read "91". Press key **2** to implement the tracking balance adjustment the display should now read "81". Press key **3** 4 times. The display will change, returning to "81" on the fourth press.
4. As shown in the diagram above, monitor the LPF outputs using the oscilloscope and check that the phase difference is within 75° . Refer to the photographs supplied to determine the phase angle.
5. If the phase difference is determined to be greater than 75° try changing the PU unit to see if there is any improvement. If, after trying this a number of times, the grating angle does not become less than 75° then the mechanism should be judged to be at fault.

• **Note**
Because of eccentricity in the disc and a slight misalignment of the clamping center the grating waveform may be seen to "wobble" (the phase difference changes as the disc rotates). The angle specified above indicates the average angle.

• **Hint**
Reloading the disc changes the clamp position and may decrease the "wobble".

Grating waveform

Ech → Xch 20mV/div, AC
Fch → Ych 20mV/div, AC

0°

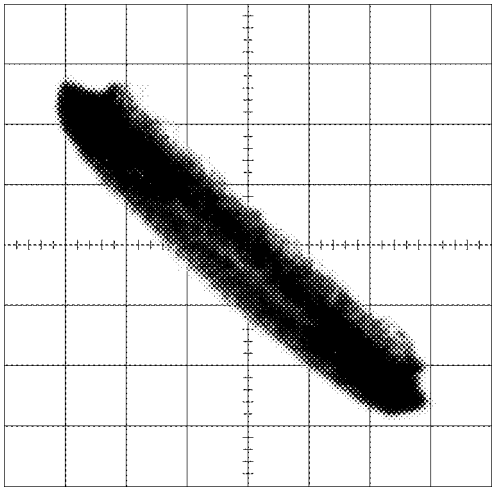

30°

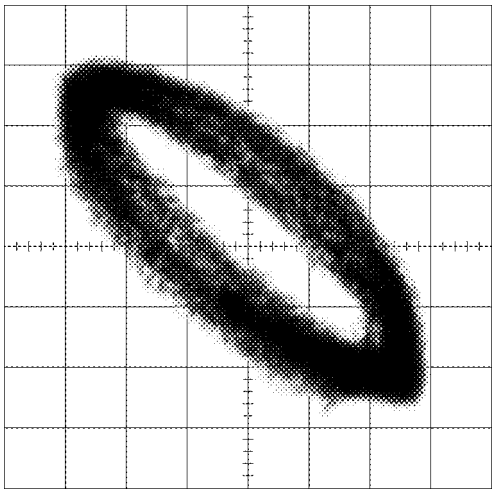

45°

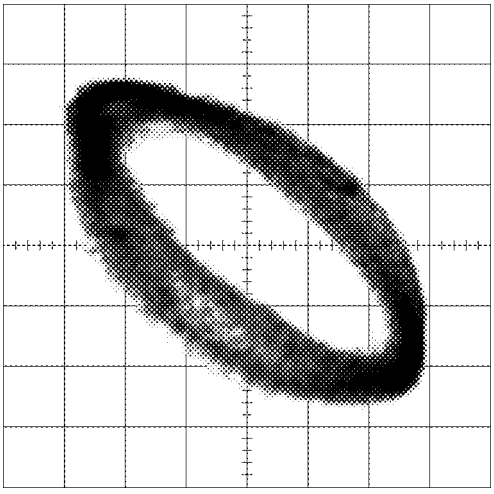

60°

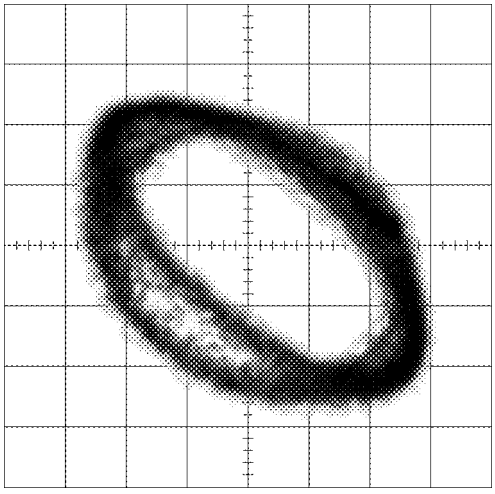

75°

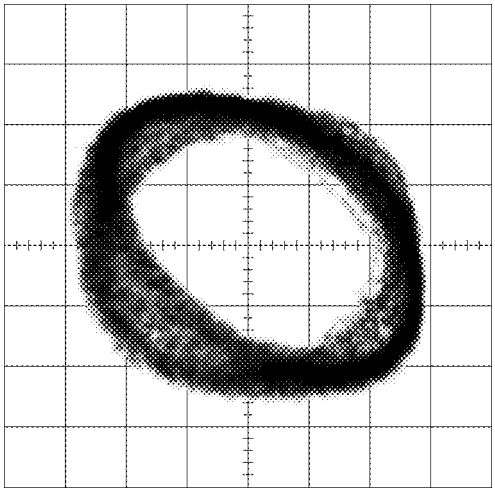

90°

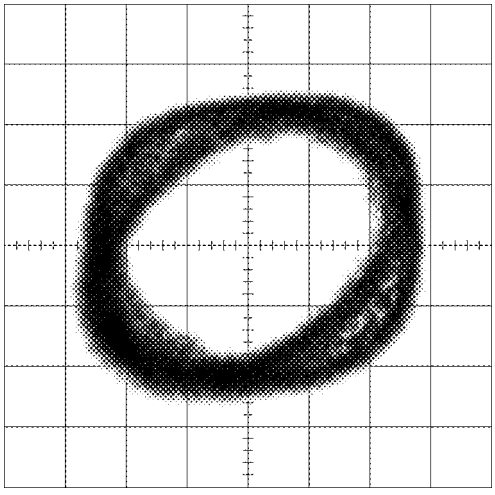

7. GENERAL INFORMATION

7.1 PARTS

7.1.1 IC

● **Pin Functions (UPD63702AGF)**

Pin No.	Pin Name	I/O	Function and Operation
1	D.VDD		Supplies current of positive voltage to the logic circuits
2	$\overline{RST}$	I	System reset input pin
3	AO	I	Microcomputer interface AO="L": $\overline{STB}$ active and set to address register AO="H": $\overline{STB}$ active and set to parameter
4	$\overline{STB}$	I	Signal to latch serial data within the LSI
5	$\overline{SCK}$	I	Clock input pin to input and output serial data
6	SO	O	Outputs serial data and status signal
7	SI	I	Serial data input pin
8	D.GND		Logic circuit GND
9	X.GND		Crystal oscillation circuit GND
10	XTAL	I	Crystal oscillator connection pin
11	$\overline{XTAL}$	O	Crystal oscillator connection pin
12	X.VDD		Supplies current of positive voltage to the crystal oscillation circuit
13	DA.VDD		Supplies current of positive voltage to the D/A converter
14	R+	O	Right channel analog audio data output pin
15	R-	O	Right channel analog audio data output pin
16,17	DA.GND		D/A converter GND
18	L-	O	Left channel analog audio data output pin
19	L+	O	Left channel analog audio data output pin
20	DA.VDD		Supplies current of positive voltage to the D/A converter
21	D.VDD		Supplies current of positive voltage to logic circuit
22	FLAG	O	Flag output pin to indicate that audio data currently being output consists of noncorrectable data
23	WDCK	O	Pin to output double the frequency of LRCK
24	C16M	O	Pin to output the clock
25	EMPH	O	Output pin for the pre-emphasis data in the sub-Q code
26	DIN	I	Input pin for serial audio data
27	DOUT	O	Output pin for the serial audio data
28	SCKO	O	Output pin for the clock for the serial audio data
29	LRCK	O	Signals to distinguish the right and left channels of the audio data output from DOUT. Frequency is 44.1kHz at 50% duty at normal regeneration
30	TX	O	Output pin for the digital audio interface data
31	CTLV	I	Oscillation control pin for high-frequency clock generation VCO used for the digital PLL upon regeneration at fast speed of 2- or 4-fold
32	POUT	O	Output point for phase comparison
33	D.GND		GND for the logic circuit
34	VCO	I	Input pin for the inverter
35	$\overline{VCO}$	O	Output pin for the inverter
36	D.VDD		Supplies current of positive voltage to the logic circuit
37	PLCK	O	Pin for monitoring the bit clock
38	LOCK	O	Indicates "H" when the synchronized pattern detection signal matches the frame counter output at the EFM recovery modulation, and "L" when they don't match
39	WFCK	O	Minute-cycle signal for the bit clock, the signal indicates the cycle of 1 frame (approx. 7.35kHz)
40	RFCK	O	Minute-cycle signal for the clock, the signal indicates cycle of 1 frame (approx. 7.35kHz)
41	D.GND		GND for the logic circuit
42,43	TEST0,1	I	Test pins
44,45	TM2, TM4	I	Pins for controlling regeneration at fast speed of 2- or 4-fold
46-49	T4-T7	I	Test pins
50,51	C1D1, C1D2	O	Output pin for indicating the C1 error correction results

Pin No.	Pin Name	I/O	Function and Operation
52-54	C2D1-C2D3	O	Output pin for indicating the C2 error correction results
55	D.VDD		Supplies current of positive voltage to the logic circuit
56	SFSY	O	Outputs 1 word of the subcode. Generally, 1 cycle is approx 136 micro seconds
57	SBSY	O	The signal indicates the beginning of the subcode block. The SFSY signal is output at high level every 98 times
58	SBSO	O	Output pin for the subcode data
59	SBCK	I	Input pin for the clock signal for read-out of the subcode data
60	A.GND		GND for the analog circuit
61	MD	O	Output pin for the spindle drive
62	SD	O	Output pin for the sled drive
63	TD	O	Output pin for the tracking drive
64	FD	O	Output pin for the focus drive
65	FBAL	O	Output pin for the focus balance control
66	TBAL	O	Output pin for the tracking balance control
67	A.VDD		Supplies current of positive voltage to the analog circuit
68	TBC	I	Switches coefficient banks for the tracking filter
69	EFM	I	Input pin for the EFM signal
70	HOLD	I	Input pin for the hold control signal
71	RFOK	I	Input pin for the RFOK signal
72	MIRR	I	Input pin for the MIRR signal
73	A.GND		GND for the analog circuit
74	HOME	I	Home position detector input
75	VR1	I	The signal input through these pins is digitized to 8-bit by the A/D converter, which by operation of the assigned register, can be read into the microcomputer
76	FE	I	Inputs a focus-error signal from the RF amplifier
77	TE	I	Inputs a tracking-error signal from the RF amplifier
78	TEC	I	Input pin for the tracking comparator
79	REFOUT	O	Output point for midpoint potential for the A/D converter for the LSI portion
80	A.VDD		Supplies current of accurate voltage to the analog circuit

IC's marked by* are MOS type.
Be careful in handling them because they are very liable to be damaged by electrostatic induction.

*UPD63702AGF

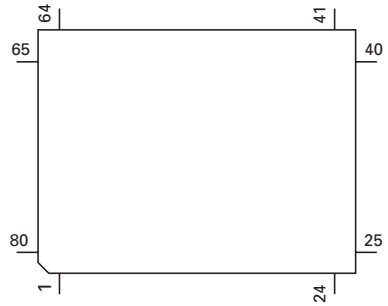

BA6997FM

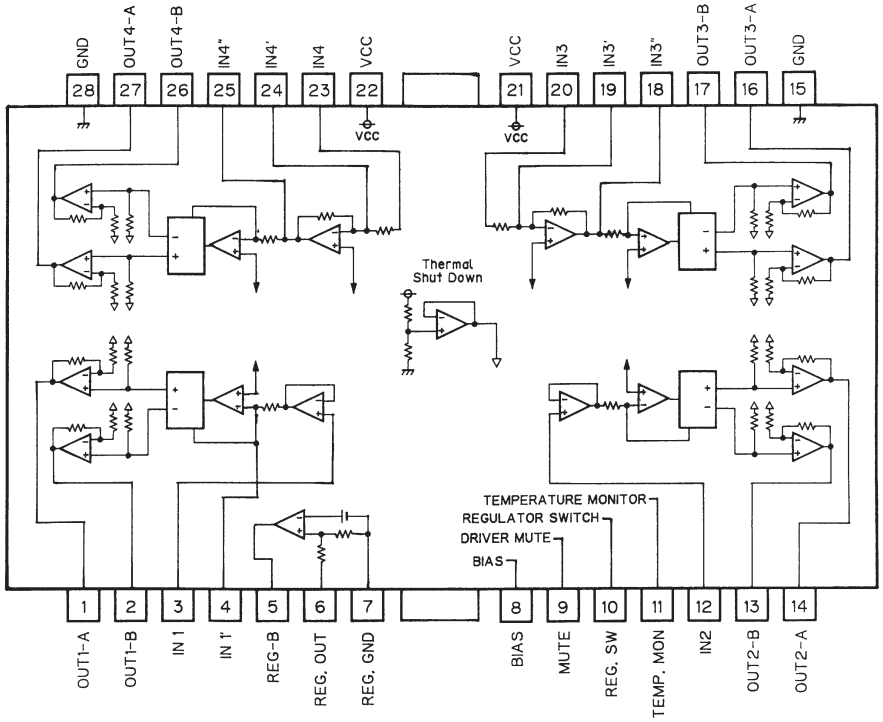

BA05SFP

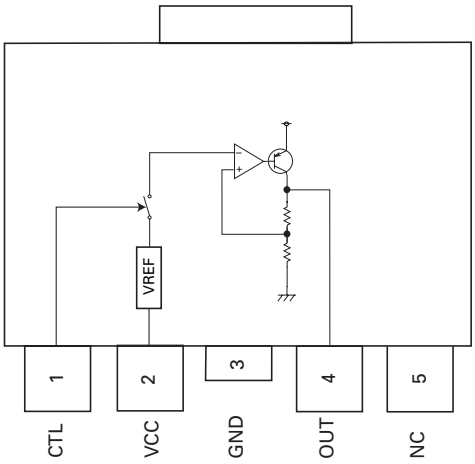

TDA7386

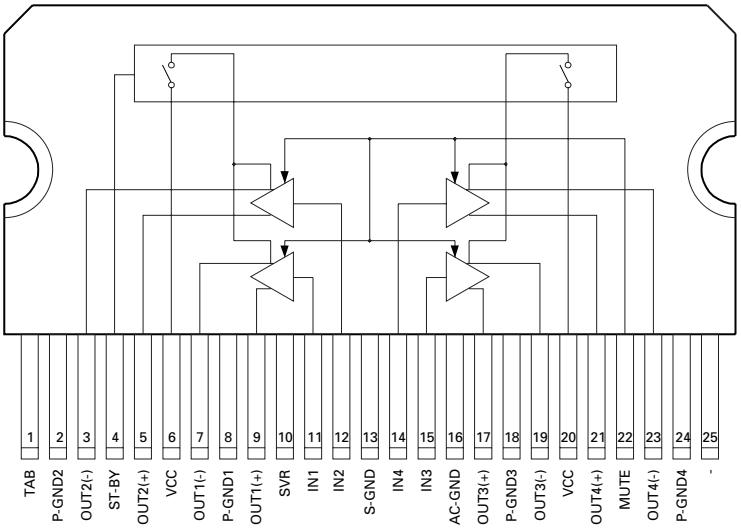

TDA7384

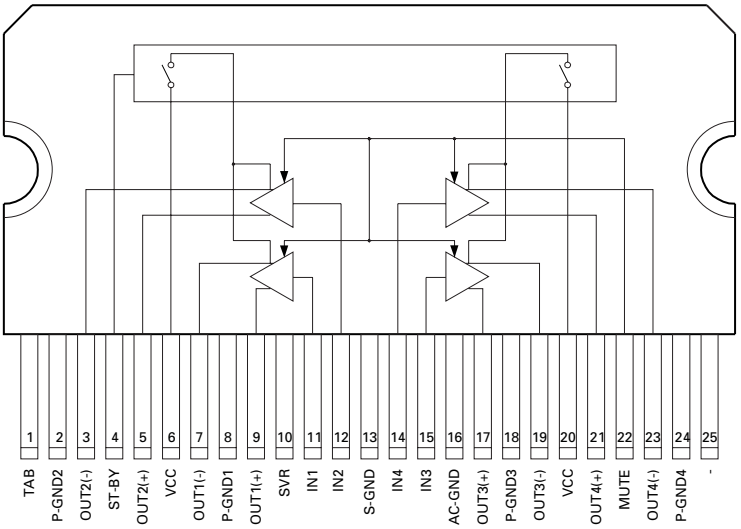

PM2006

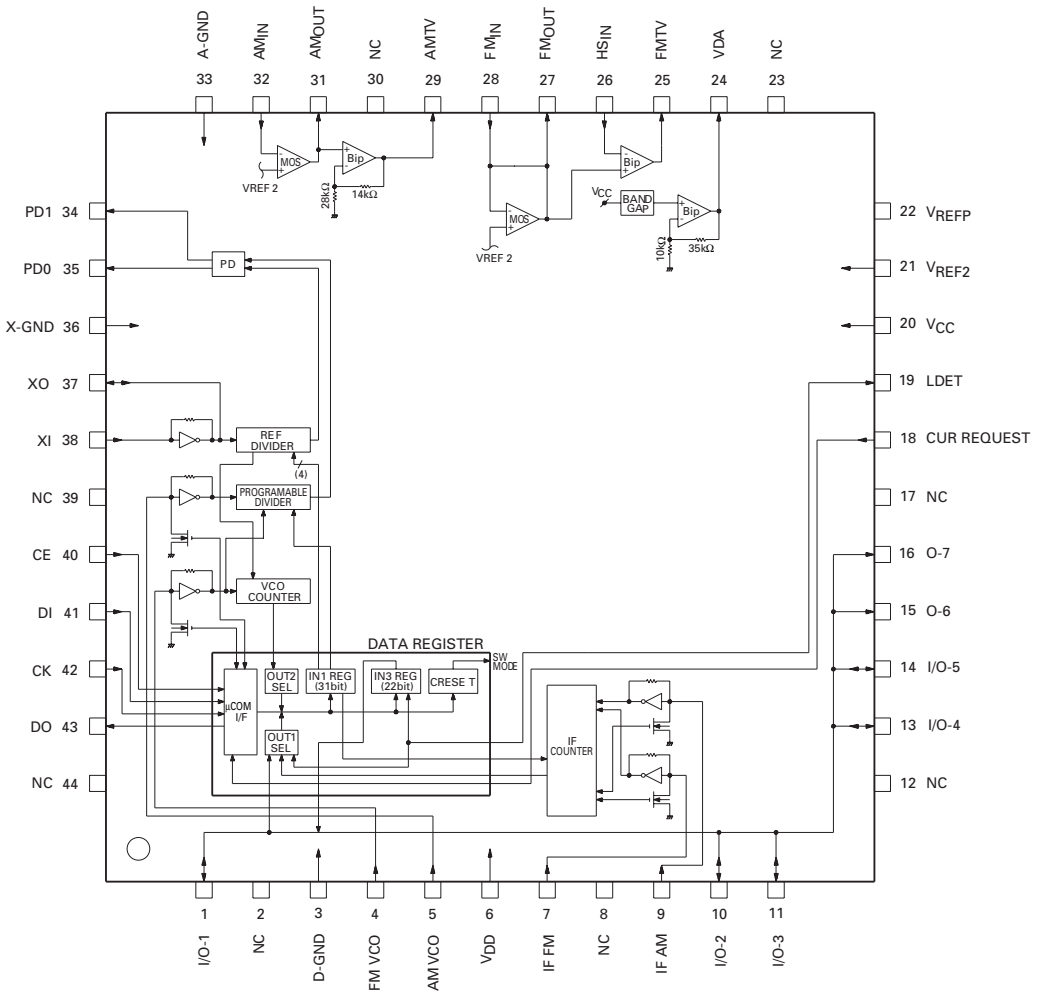

● Pin Functions(PD4884A,PD4886A)

Pin No.	Pin Name	I/O	Function and Operation
1	$\overline{\text{SWVDD}}$	O	Grille power supply control output
2	$\overline{\text{DSENS}}$	I	Grille detach sense input
3	NC		Not used
4	$\overline{\text{ISENS}}$	I	Illumination sense input
5	TESTIN	I	Test program mode input
6	$\overline{\text{IDRST}}$	O	ID-LOGIC reset output
7	IDSEL	O	ID-LOGIC select output
8	$\overline{\text{IDCK}}$	I/O	ID-LOGIC communication clock input/output
9	IDDI	I	ID LOGIC communication data input
10	IDDO	O	ID-LOGIC communication data output
11	$\overline{\text{RESET}}$	I	Reset input
12	XT2		Open
13	XT1	I	Connect to VSS
14	VSS		GND
15	X2		Crystal oscillator connection pin
16	X1	I	Crystal oscillator connection pin (12.582912MHz)
17	REGC		Connect to VDD
18	REGOFF		Connect to VDD
19	VDD		Power supply
20	ILMPW	O	Illumination power supply control output
21	SYSPWR	O	System power control output
22	$\overline{\text{ADPW}}$	O	A/D converter power output
23	LCDPW	O	LCD back light power supply control output

Pin No.	Pin Name	I/O	Function and Operation
24	IPPW	O	Power supply control output for IP BUS interface IC
25	ASENBO	O	Slave power supply control output
26	AMPW	O	AM power output
27	NC		Not used
28	MUTE	O	Mute output
29	DIM	O	Dimmer select output
30	FIEOUT	O	FIE ON/OFF control output
31,32	NC		Not used
33	VCK	O	Clock output for electronic volume
34	VST	O	Strobe pulse output for electronic volume
35	VDT	O	Data output for electronic volume
36,37	NC		Not used
38	SD	I	SD input
39	$\overline{ST}$	I	FM stereo input
40	VSS		GND
41	VDD		Power supply
42-46	NC		Not used
47	DRELAY	O	External relay output
48	DRSENS	I	Door open/close sense input
49	DRSYS	O	Door system select output
50	$\overline{DLED}$	O	Alarm LED output
51	DLSENS	I	Door lock sense input
52	STCUT	O	Ignition cut off output
53	$\overline{MOSENS}$	I	Motion/window damage sensor input
54	CD5VON	O	CD +5V power supply control output
55	CONT	O	Servo driver power supply control output
56	VDCONT	O	VD control output
57	CDMUTE	O	CD mute output
58	CDEJET	O	Load motor eject control output
59	CDLOAD	O	Load motor loading control output
60	LOCK	I	Spindle lock detector input
61	FOK	I	FOK signal input
62	PCL	O	Clock adjustment output
63	MIRR	I	Mirror detector input
64	$\overline{CLAMP}$	I	Disc clamp sense input
65	$\overline{XSCK}$	O	LSI clock output
66	XSI	I	LSI data input
67	XSO	O	LSI data output
68	XAO	O	CD LSI data discernment control signal output
69	$\overline{XRST}$	O	CD LSI reset output
70	$\overline{XSTB}$	O	CD LSI strobe output
71,72	NC		Not used
73	TEST	I	Test terminal
74	SL	I	Signal level input
75-77	NC		Not used
78	EJTSNS	I	Disc EJECT position detect input
79	DSCSNS	I	Disc detect input
80	VDSENS	I	VD over voltage sense input
81	TEMP	I	Temperature detector input
82,83	VDD		Power supply
84	GND		GND
85	RX	I	IP BUS data input
86	TX	O	IP BUS data output
87-90	NC		Not used
91	IDRDY	I	ID-LOGIC ready input
92	$\overline{ASENS}$	I	ACC power sense input
93	$\overline{BSENS}$	I	Back up power sense input
94	TUNPDI	I	PLL IC data input
95	KEYDT	I	Display data input

Pin No.	Pin Name	I/O	Function and Operation
96	DPDT	O	Display data output
97	TUNPCK	O	PLL IC clock output
98	TUNPDO	O	PLL IC data output
99	TUNPCE	O	PLL IC chip enable output
100	PEE	O	Beep tone output

*PD4884A,PD4886A

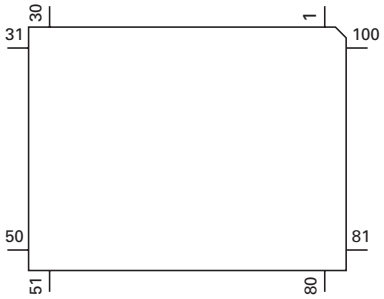

● Pin Functions (PD6194A)

Pin No.	Pin Name	I/O	Format	Function and Operation
1-8	NC	O	N	Not used
9	$\overline{OE}$	O	N	ROM output control
10	$\overline{ROMEN}$	O	N	ROM enable
11	ADD17	O	N	ROM address #17
12	AVCC			5V power supply input
13	AVR			5V power supply input
14	AVSS			Connect to GND
15	$\overline{IRSEL}$	I		Select input
16-19	NC	I		Not used
20	$\overline{IRRST}$	I		Reset input
21,22	MOD0,1			Connect to GND
23	XIN			Oscillator input
24	XOUT			Oscillatro output
25	VSS			Connect to GND
26-28	NC	O	C	Not used
29	IRRDY	O	C	Communications ready output
30-33	ADD16-13	O	C	Rom address #16-#13
34-41	ADD7-0	O	C	Rom address #7-#0
42-49	DT7-0	I		Rom data #7-#0 input
50	VSS			Connect to GND
51	TEST	I		Test program input
52	$\overline{IRSCK}$	I		Communications clock input
53	IRDO	O	C	Communications data output
54	IRDI	I		Communications data input
55,56	NC	O	C	Not used
57	VCC			5V power supply input
58,59	NC	O	C	Not used
60-64	ADD8-12	O	N	ROM address #8-#12

*PD6194A

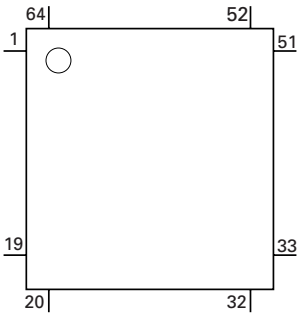

Format	Meaning
C	C MOS
N	N channel open drain

PD8033A

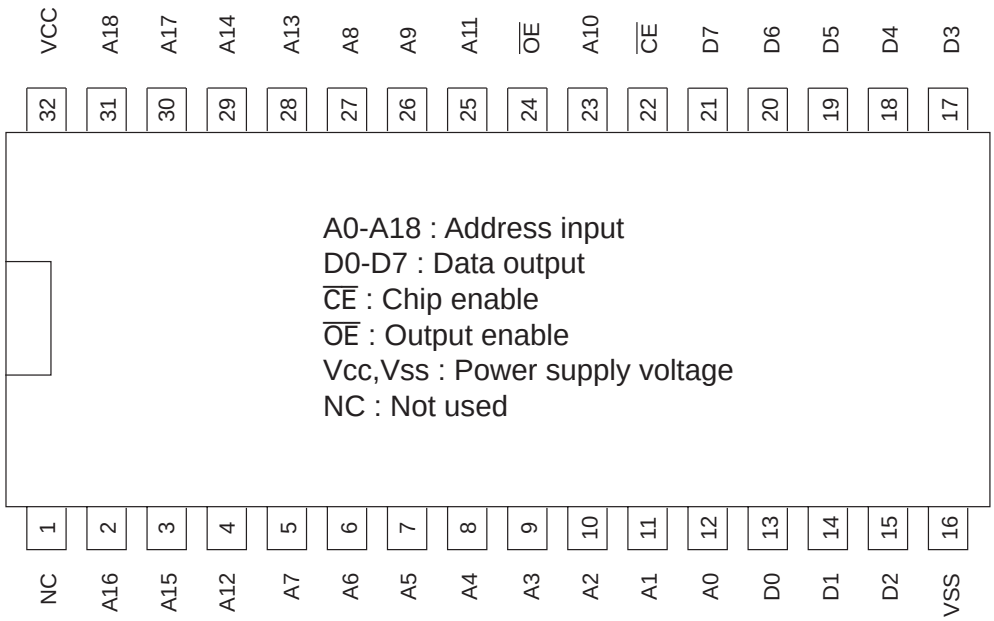

● **Pin Functions (PD6197A)**

Pin No.	Pin Name	I/O	Function and Operation
1	VSS		GND
2	X1		Crystal oscillator connection pin
3	X0		Crystal oscillator connection pin
4	NC		Not used
5,6	MOD1,0	I	Connect to GND
7	NC		Not used
8	KYDT	O	Display/key data output
9	DPDT	I	Display/key data input
10	REMIN	I	Remote control pulse input
11,12	NC		Not used
13-16	$\overline{KD}4$-$\overline{KD}1$	I	Key data input
17-21	$\overline{KS}6$-$\overline{KS}2$	O	Key strobe output
22	NC		Not used
23	VDD		VDD
24-73	SEG0-49	O	LCD segment output
74-77	COM3-0	O	LCD common output
78	VLCD	I	LCD voltage input
79,80	V2,V1		Power supply terminal

*PD6197A

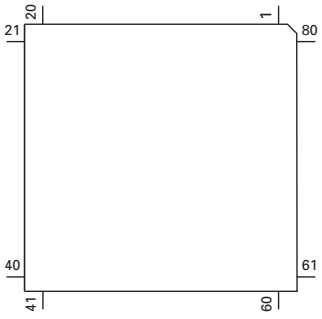

7.1.2 DISPLAY

- **CAW1479 (DEH-P645/UC,DEH-46/UC,DEH-445/UC,DEH-41/UC)**
- **CAW1459 (DEH-P56/UC,DEH-P545/UC)**

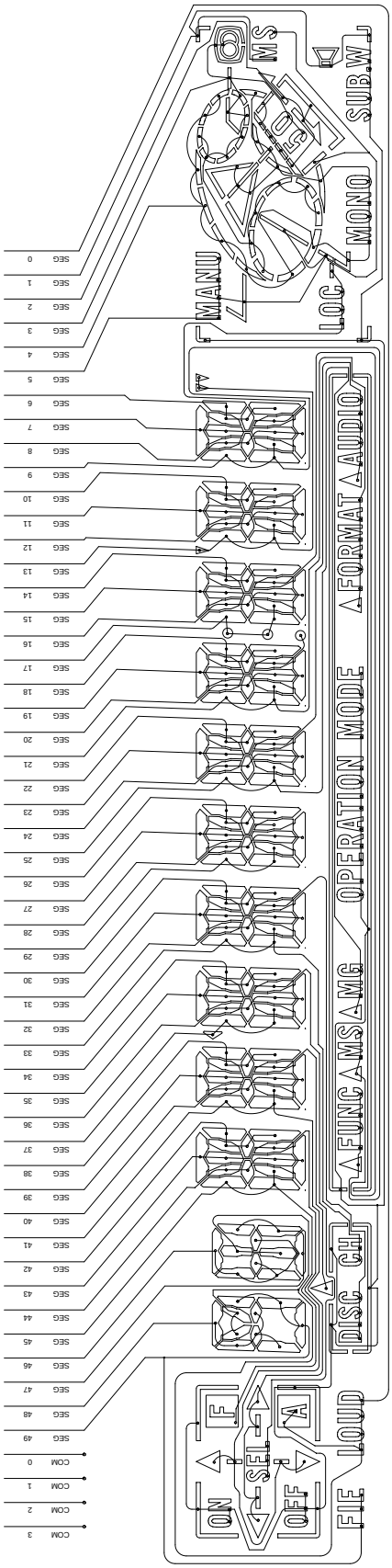

Fig. 25

7.2 DIAGNOSIS

7.2.1 DISASSEMBLY

● **Removing the Case(Not shown)**

Removing the two screws.

● **Removing the Detach Grille Assy and CD Mechanism Module**

1. A×4

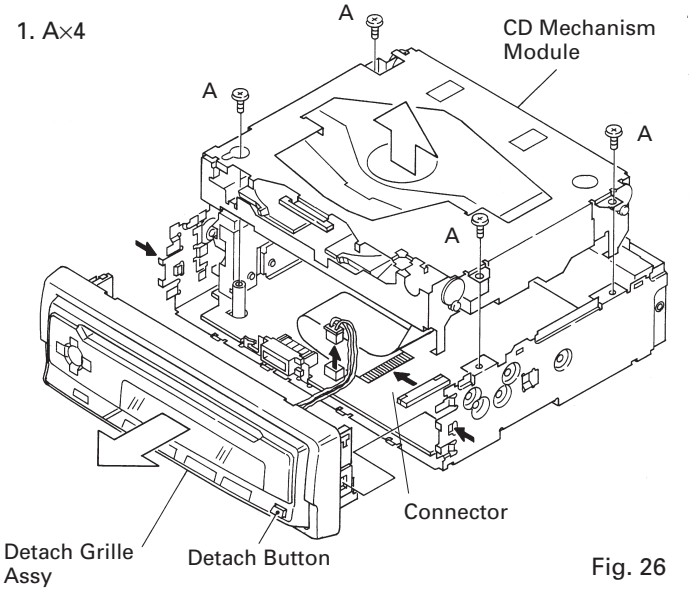

Fig. 26

● **Removing the Chassis Unit and Tuner Amp Unit**

1. A×2
2. B×2
3. C×1
4. D×1

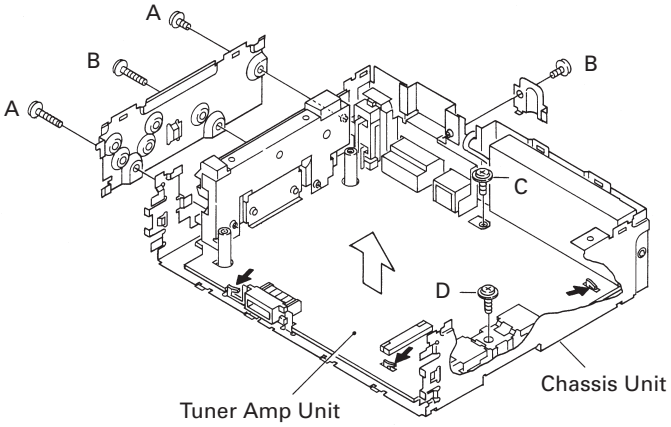

Fig. 27

7.2.2 TEST MODE

● Error Number Indication

The system enters error mode to display the cause of error with a number when the system cannot operate CD or stops operation because of an error. The purpose of this measure is to reduce frequency of calls from users asking help for problems that are caused by incorrect operation by user, as well as to assist analysis and repair in servicing.

(1) Basic means of display

- An error code will be written on DMIN (minute area for display) and DSEC (second area for display) when CSMOD (CD mode area for system) is SERBORM.
  The same data will be written on DMIN and DSEC.
  DTNO shall be blank as before.
- Display examples of the head unit
  Error codes will be displayed as shown below, depending on the capability of LCD. An error number will be displayed in the place of "xx."
  - •8-digit display ERROR-XX
  - •6-digit display ERR-XX or Err-XX
  - •4-digit display E-XX

  With OEM products, display of error codes shall be according to the specificatins of the manufacturer.

(2) Error codes

Error code	Classification	Description	Cause / Detail
10	ELECTRIC	Carriage home failure	Carriage doesn't move to or from the innermost position →Home switch failed and/or carriage immobile
11	ELECTRIC	Focus failure	Focus failed →Defects, disc upside-down, severe vibration
12	ELECTRIC	SETUP failure Subcode failure	Spindle failed to lock or subcode unreadable →Spindle defective, defect, severe vibration
14	ELECTRIC	Mirror failure	Unrecorded CD-R The disc is upside-down, defects, vibration
17	ELECTRIC	Set up failure	AGC protect failed →Defects, disc upside-down, severe vibration
19	ELECTRIC	Improper T.BAL adjustment	Value of T.BAL adjustment is out of parameter.
30	ELECTRIC	Search time out	Failed to reach target address →Carriage / tracking defective and/or defects
A0	SYSTEM	Power failure	Power overvoltage or short circuit detected →Switching transistor defective and/or power abnormal

(4) Number of error codes

One hundred error codes (00 to 99) will be available.

(5) Remarks

- •Error codes are not displayed for the mechanism alone (because CD is OFF when an mechanical error is generated).
- •When the system cannot read TOC, it is not deemed as an error, and the system continues operation to a certain extent.
- •Be sure to take measures as shown in the display examples whenever designing a new head unit.
- •The first digit of an error code has a meaning as follows:
  - 1X : Error related to setup
  - 3X : Error related to the search function
  - AX : Other errors

● New Test Mode

When S-CD is specified as the source, basically the system plays as normal operation. After setup, the system displays the cause and time (absolute time) of an error if focus search is improper, spindle lock is removed, subcode cannot be read, or sound is skipped. During setup, the system displays the operation status of CD control software (internal RAM : CPOINT). The purpose of these displays and functions are to detect aging of servicing, as well as to improve efficiency of defect analysis.

(1) How to enter NEW TEST Mode

1. Reset the system by pressing keys (depending on the product) to enter the conventional Test mode.
2. Select S-CD as the source by pressing the source or CD key, then inserting a disc. Confirm that the regulator is OFF. Press the Switch Jump Mode key.
3. After that, the system will stay in the new Test mode, regardless of whether S-CD is OFF or ON.

To exit from the new Test mode, reset the system.

See the test mode flow chart Page 78.

(2) Relations of keys

keys	Test Mode		New Test Mode	
	Regulator OFF	Regulator ON	PLAY in progress	Error Protection
BAND	To Regulator ON	To Regulator OFF	—	Time / Err No.select
→	—	FWD-Kick	FF / TR+	—
←	—	REV-Kick	REV / TR-	—
1	—	Tracking Close	Scan	—
2	—	Tracking Open	RPT	—
3	—	Focus Close	RDM	—
—	—	Focus Open	—	—
—	—	Jump Off	—	—
6	To New Test Mode	Jump Mode select	Auto / Manu	T.No. / Time select

Operations, such as EJECT, CD ON/OFF are performed normal mode.

(3) Error Cause, Error Code

Code	Classification	Description	Cause / Details
40	ELECTRIC	Put out of focus	FOK=Low has continued for 100 msec →Damaged or soiled disc. vibration, or detective servo
41	ELECTRIC	Spindle unlock	LOCK=has continued for 100 msec →Damaged or soiled disc. vibration, or detective servo
42	ELECTRIC	Failed to read subcode	The system could not read subcode for 100 msec →Damaged or soiled disc. vibration, or detective servo
43	ELECTRIC	Sound skipped	The last-address-memory function activated →Damaged or soiled disc. vibration, or detective servo

There will be no mechanical error during aging. Error codes should be displayed in the same manner as in Normal mode.

7.3 BLOCK DIAGRAM

● **DEH-P645/UC**

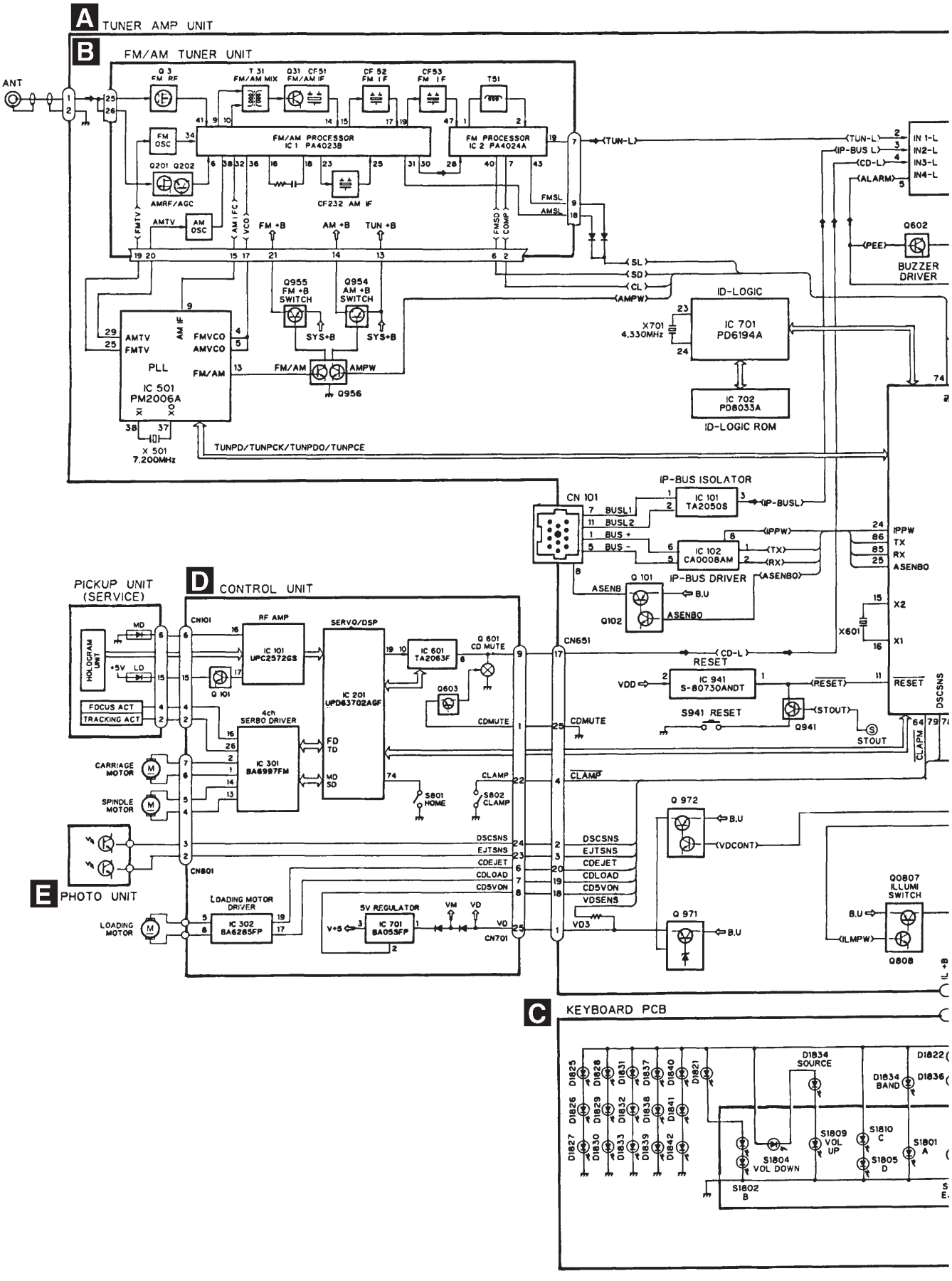

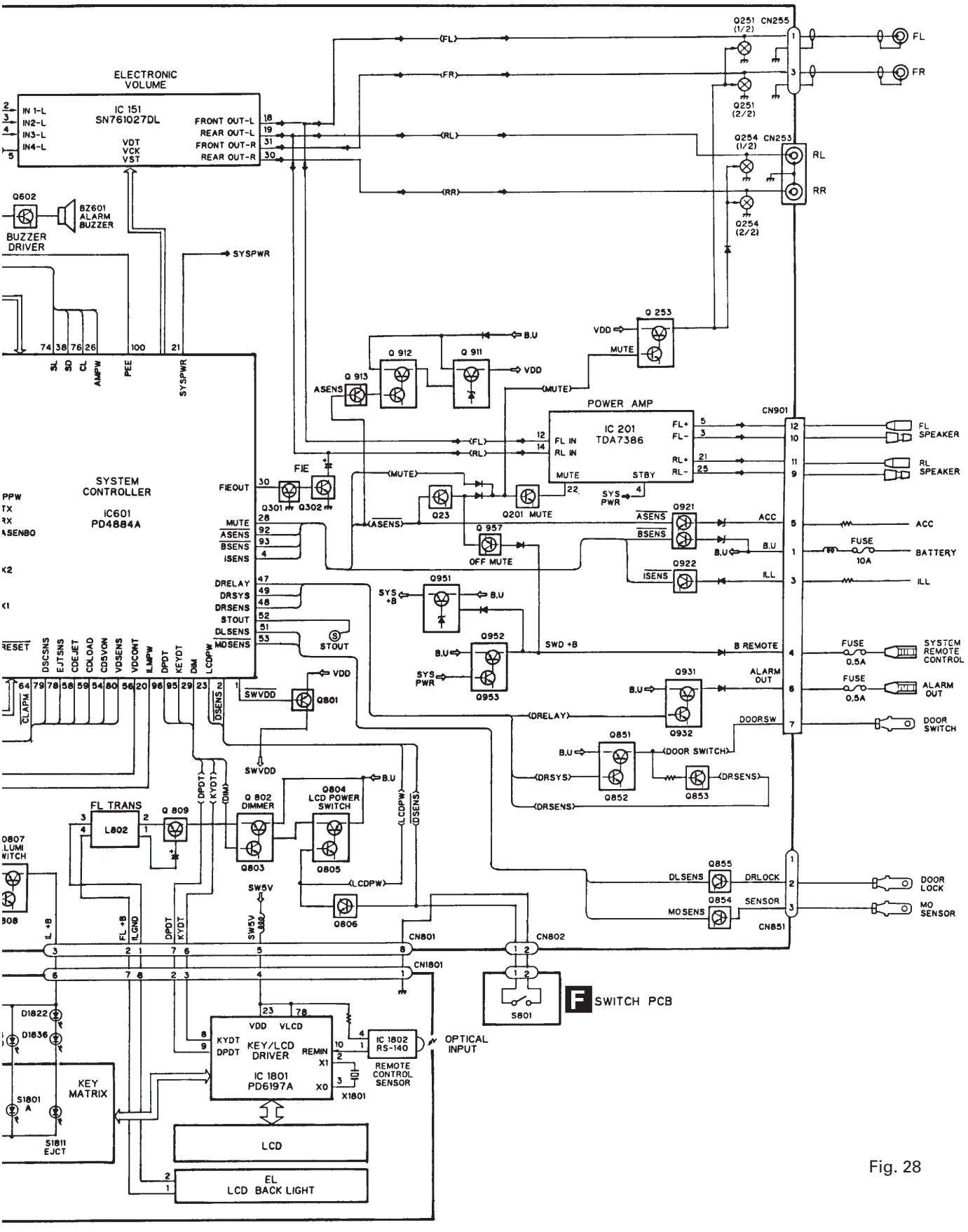
ELECTRONIC VOLUME
IC 151
SN761027DL
IN 1-L
IN2-L
IN3-L
IN4-L
VDT
VCK
VST
FRONT OUT-L
REAR OUT-L
FRONT OUT-R
REAR OUT-R
Q602
BZ601 ALARM BUZZER
BUZZER DRIVER
SYSPWR
SYSTEM CONTROLLER
IC601
PD4884A
FIEOUT
MUTE
ASENS
BSENS
ISENS
DRELAY
DRSYS
DRSENS
STOUT
DLSENS
MOSENS
FIE
Q301
Q302
Q 913
Q 912
Q 911
Q 253
POWER AMP
IC 201
TDA7386
FL IN
RL IN
MUTE
STBY
FL+
FL-
RL+
RL-
Q23
Q201 MUTE
Q 957
OFF MUTE
Q951
Q952
Q953
Q931
Q932
Q851
Q852
Q853
Q801
Q 802
DIMMER
Q803
Q804
LCD POWER SWITCH
Q805
Q806
Q 809
FL TRANS
L802
Q251 (1/2)
Q251 (2/2)
Q254 (1/2)
Q254 (2/2)
CN255
CN253
CN901
CN851
CN801
CN802
CN1801
FL
FR
RL
RR
FL SPEAKER
RL SPEAKER
ACC
BATTERY
FUSE 10A
ILL
B REMOTE
SYSTEM REMOTE CONTROL
FUSE 0.5A
ALARM OUT
DOORSW
DOOR SWITCH
DOOR LOCK
MO SENSOR
DRLOCK
SENSOR
Q855
Q854
S801
F SWITCH PCB
IC 1802
RS-140
REMOTE CONTROL SENSOR
OPTICAL INPUT
KEY/LCD DRIVER
IC 1801
PD6197A
X1801
KEY MATRIX
S1801 A
S1811 EJCT
D1822
D1836
LCD
EL LCD BACK LIGHT

Fig. 28

8. OPERATIONS AND SPECIFICATIONS

8.1 OPERATIONS

● **Connection Diagram**

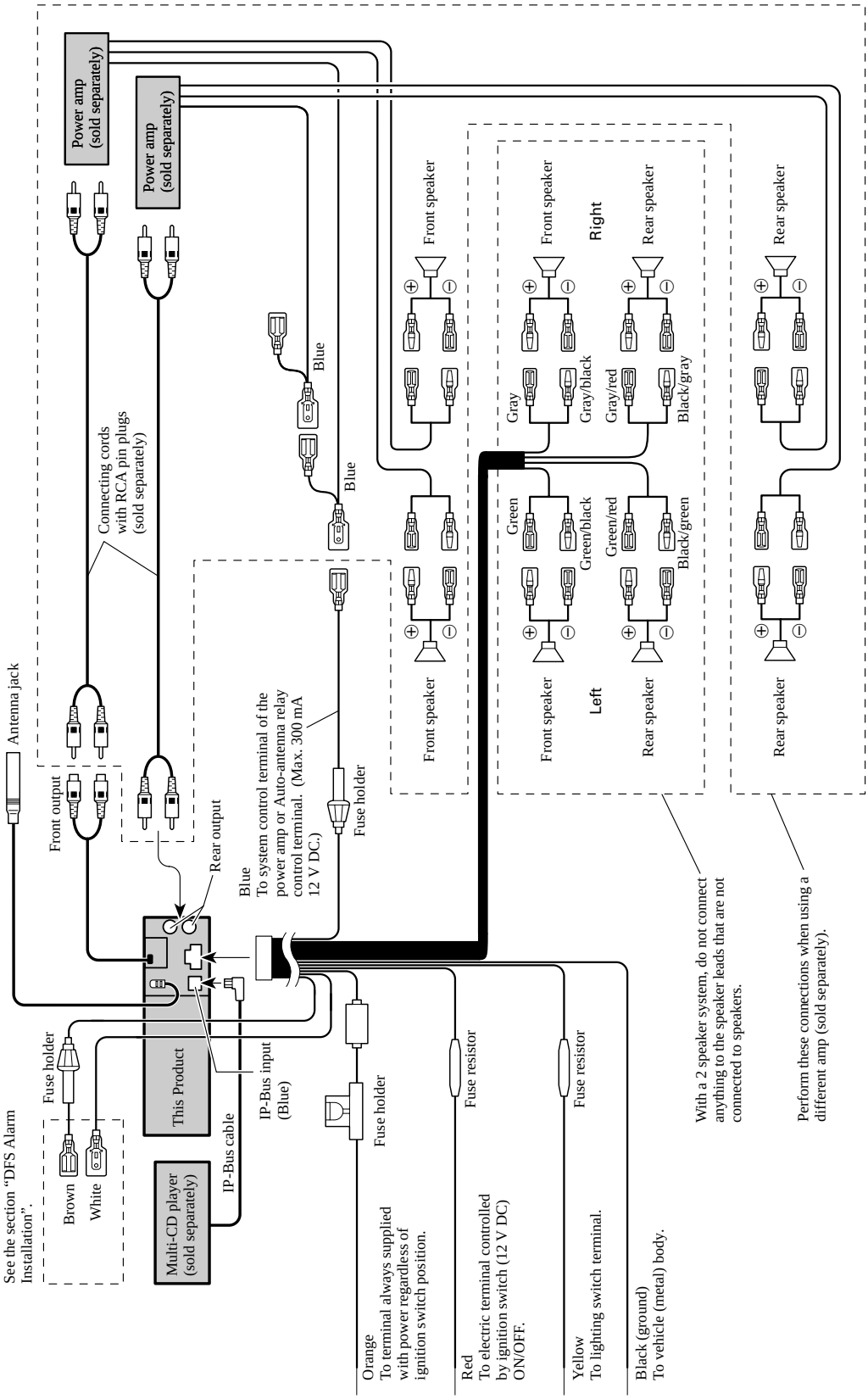

Fig. 29

Key Finder

Head Unit

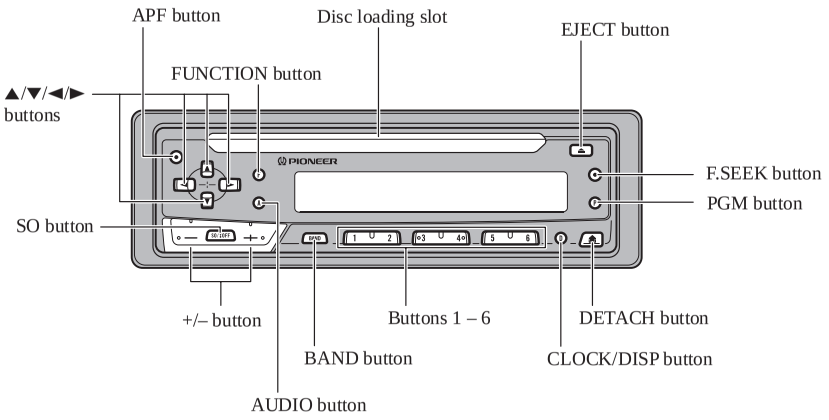

Remote Controller

A remote controller that enables remote operation of the head unit is supplied. Operation is the same as when using buttons on the head unit.

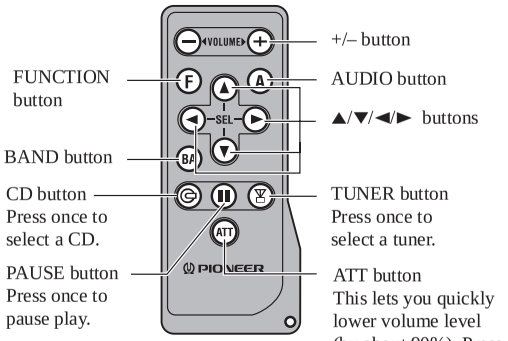

Remote Controller and Care

Using the Remote Controller

This product is equipped with a remote controller for convenient operation.

- Point the controller in the direction of the front panel to operate.

Precaution:

- Do not store the remote controller in high temperatures or direct sunlight.
- The controller may not function properly in direct sunlight.
- Do not let the remote controller fall onto the floor, where it may become jammed under the brake or accelerator pedal.

Battery

There are two types of remote controller. Refer to the illustration that applies to your supplied remote controller, and load the battery accordingly.

- **Slide the tray out on the back of the remote controller and insert the battery with the (+) and (–) poles pointing in the proper direction.**

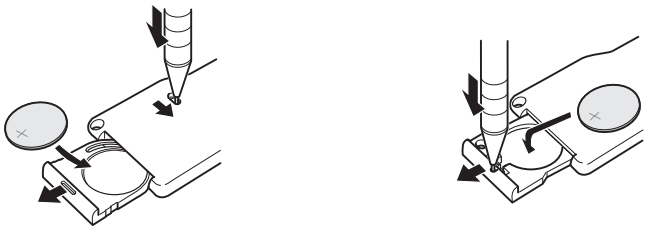

Replacing the Lithium Battery:

- Use only lithium battery “CR2032”, 3 V.

Precaution:

- Remove the battery if the remote controller is not used for a month or longer.
- If the event of battery leakage, wipe the remote controller completely clean and install a new battery.

⚠ WARNING:

- Keep the Lithium Battery out of reach of children. Should the Battery be swallowed, immediately consult a doctor.

⚠ CAUTION:

- Do not recharge, disassemble, heat or dispose of battery in fire.
- Use a CR2032 (3 V) Lithium Battery only. Never use other types of battery with this product.
- Do not handle the battery with metallic tools.
- Do not store the Lithium Battery with metallic materials.
- Dispose of the used Lithium Battery, in compliance with applicable laws and regulations.
- Always check carefully that you are loading battery with its (+) and (–) poles facing in the proper directions.

Basic Operation of Tuner

Manual and Seek Tuning

- **You can select the tuning method by changing the length of time you press the ◄/► button.**

Manual Tuning (step by step)	0.3 seconds or less
Seek Tuning (automatically)	0.3 – 2 seconds
Manual Tuning (continuously)	2 seconds or more

Note:
- "ST" stereo indicator lights when a stereo station is selected.

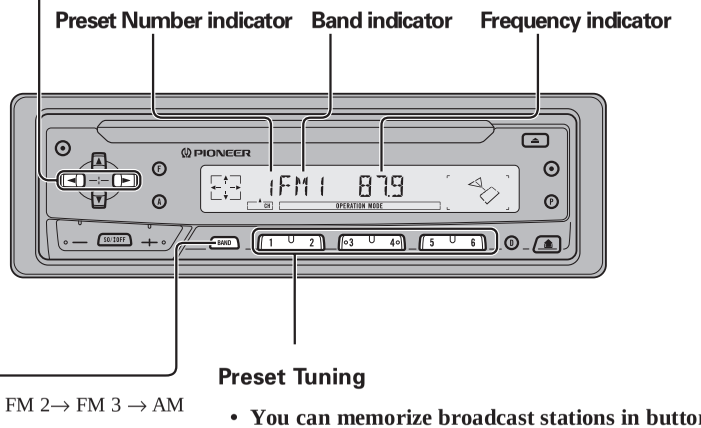

Preset Tuning

- **You can memorize broadcast stations in buttons 1 through 6 for easy, one-touch station recall.**

Preset station recall	2 seconds or less
Broadcast station preset memory	2 seconds or more

Note:
- Up to 18 FM stations (6 in FM1, FM2 and FM3) and 6 AM stations can be stored in memory.
- You can also use the ▲ or ▼ buttons to recall broadcast stations memorized in buttons 1 through 6.

Basic Operation of Built-in CD Player

Disc Loading Slot

The built-in CD player plays one standard 12 cm or 8 cm (single) CD at a time. Do not use an adapter when playing 8 cm CD.

Eject

Note:
- The CD function can be turned ON/OFF with the disc remaining in this product. (See page 9.)
- Discs left partially inserted after ejection may incur damage or fall out.

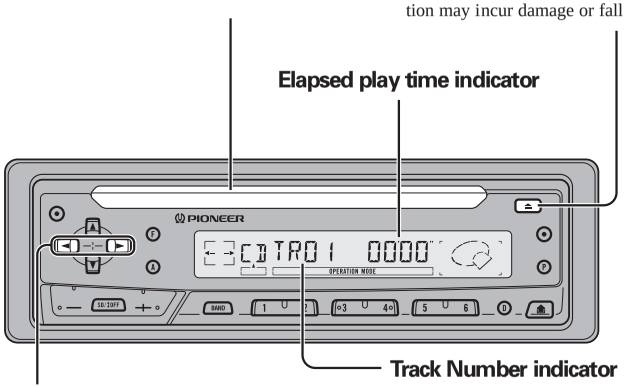

Track Search and Fast forward/Reverse

- **You can select between Track Search or Fast forward/Reverse by pressing the ◄/► button for a different length of time.**

Track Search	0.5 seconds or less
Fast forward/Reverse	Continue pressing

Note:
- If a disc cannot be inserted fully or playback fails, make sure the recorded side is down. Push the EJECT button and check the disc for damage before reinserting it.
- If a CD is inserted with the recorded side up, it will be ejected automatically after a few moments.
- If the built-in CD player cannot operate properly, an error message (such as "ERROR-14") appears on the display. Refer to "Built-in CD Player's Error Message" on page 61.

Basic Operation of Multi-CD Player

This product can control one or more multi-CD players. (There are some types of Multi-CD players such as CDX-P630S which you cannot connect more than one.)

Switching the Multi-CD Player

Using a multiple connection adapter lets you connect up to three Multi-CD players.

M-CD 1 → M-CD 2→ M-CD 3
(Displayed for about 2 seconds.)

Track Search and Fast forward/Reverse

- **You can select between Track Search or Fast forward/Reverse by pressing the ◄/► button for a different length of time.**

Track Search	0.5 seconds or less
Fast forward/Reverse	Continue pressing

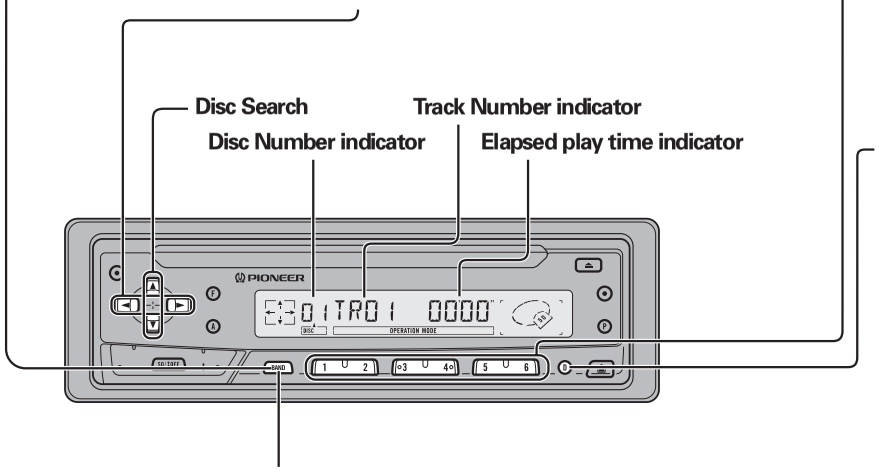

Ejecting a Single Disc (for 50-Disc type only)

- **Press the BAND button for 2 seconds or more, and you can eject the currently playing disc from the extra tray.**

  (Refer to the operation manual for the 50-Disc type Multi-CD player for details concerning disc ejection from the extra tray.)

Note:
- This function does not operate if a disc is already loaded in the extra tray.

Disc Number Search (for 6-Disc, 12-Disc types)

- **You can select discs directly with the 1 to 6 buttons. Just press the number corresponding to the disc you want to listen to.**

Note:
- When a 12-Disc Multi-CD Player is connected and you want to select disc 7 to 12, press the 1 to 6 buttons for 2 seconds or longer.

Disc Number Rough Search (for 50-Disc type only)

This handy function lets you select discs loaded in a 50-Disc Multi-CD Player using the 1 to 5 buttons. The 50 discs are divided into five blocks, with each of the 1 to 5 buttons assigned to a block.

- **Select the desired block with the 1 to 5 buttons.**

Note:
- After completing a rough search, use the ▲ and ▼ buttons to select a desired disc.

Switching between displays

- **Each time you press the CLOCK/DISP button, the display switches between Disc Title and Group indications for the disc currently playing.**

  Playback mode (Elapsed play time) → Disc Title → Music Group

Note:
- Music Group display is a 50-Disc type Multi-CD player function. You cannot switch to this display with 6-Disc and 12-Disc type Multi-CD players.
- If you switch displays when disc titles have not been input or when discs have not been allocated to a music group, “NO TITLE” or “NO GROUP” is displayed for about 8 seconds.

Note:
- The multi-CD player may perform a preparatory operation, such as verifying the presence of a disc or reading disc information, when the power is turned ON or a new disc is selected for playback. “READY” is displayed.
- When a magazine is loaded into a 50-Disc type Multi-CD Player, information on all the discs in the magazine is read.
  If you start playing a disc on a 50-Disc type Multi-CD Player before reading of information on all discs has been completed, reading of information stops part way through. This will prevent you from using a number of functions. (If you try and use these functions, “NOT READY” is displayed.)
  If this happens, reading of information begins again when you switch to a component other than the 50-Disc type Multi-CD Player.
- If the multi-CD player cannot operate properly, an error message such as “ERROR-14” is displayed. Refer to the multi-CD player owner’s manual.
- If there are no discs in the multi-CD player magazine, “NO DISC” is displayed.
- “LOAD” will be displayed in the following cases:
  * If the disc in the extra tray in selected.
  * If the disc in moved from the extra tray to the magazine.
  (Refer to the 50-Disc type multi-CD player owner’s manual.)

Tuner Operation

Local Seek Tuning (LOCAL)

When Local mode is ON, you can only select broadcast stations providing strong reception.

1. **Press the FUNCTION button and select the Local mode (LOCAL) in the Function Menu.**

2. **Switch the Local ON/OFF with the ▲/▼ buttons.**

"LOC"

3. **Select the desired Local Seek sensitivity with the ◄/► buttons.**

FM : LOCAL 1 ↔ LOCAL 2 ↔ LOCAL 3 ↔ LOCAL 4
AM : LOCAL 1 ↔ LOCAL 2

Note:

- The LOCAL 4 setting allows reception of only the strongest stations, while lower settings let you receive progressively weaker stations.

This product features a tuner with ID LOGIC functions.
ID LOGIC is a database of information about AM and FM stations throughout the United States and in some parts of Canada and Mexico.
To enable you to take advantage of this information, this product features a wide range of functions.
This product can display Broadcast Station Call Signs, Format (Program type) and tuning to stations broadcasting a desired format.

Note:
- Sections 1 to 5 explain basic operations, and Sections 6 to 9 deal with special functions.
- Before using ID LOGIC functions, you must first perform Location Set-up. (Refer to Section 1.)

1. Location Set-Up (LOCATION)

Set the name of the country, state and city (nearest city to the vehicle position) that the vehicle is positioned in.

1. **During FM reception, select the Location Set-Up mode (LOCATION) in the Detailed Setting Menu. (Refer to page 18.)**

2. **Select the country.**

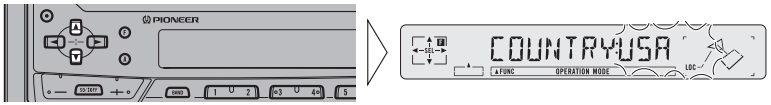

3. **Advance to next selection.**

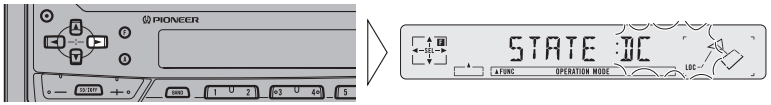

4. **Select the state.**

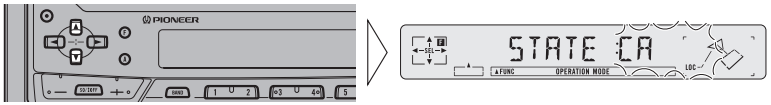

States are stored alphabetically.

5. **Advance to next selection.**

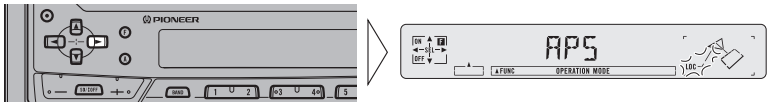

6. **Using the APS (Auto Position Setting) function, automatically set the city the vehicle is located in.**

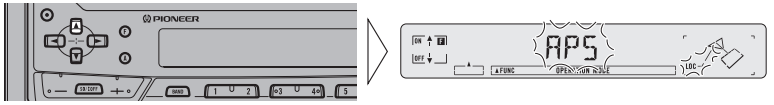

When you have completed APS, the city name flashes in the display.

When you have correctly set the city name, perform procedure 11 to cancel the Location Set-Up mode.
If you have not correctly set the city name, perform procedure 7 to set the name manually.

7. **Manually set the city.**

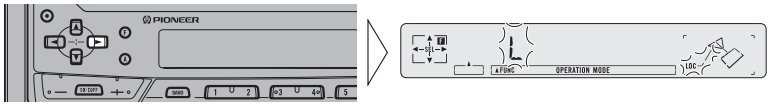

The initial letters of city names are displayed for city name selection.

8. **Select the initial of the city name.**

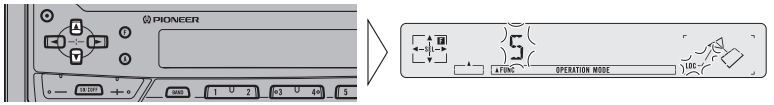

Continued overleaf.

9. Fix your choice of the initial.

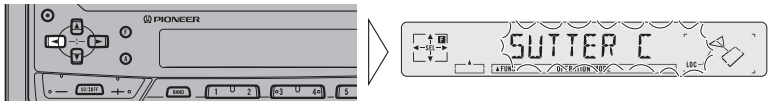

One city having your selected initial letter will be displayed.

10. Select the city.

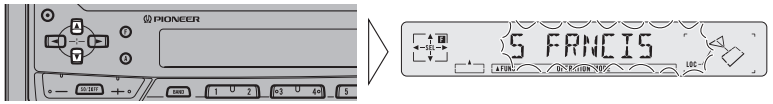

Cities are stored alphabetically.

11. When the correct city has been selected, cancel the Location Set-Up mode.

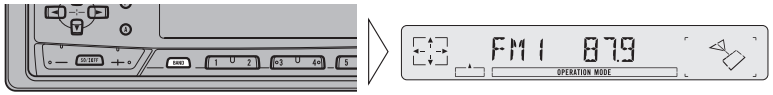

2. Format Tuning

This product allows you to look for a station by format (program type). Formats are divided into 8 types, such as ROCK, COUNTRY, NEWS and TALK.

Group Formats	Corresponding Formats
ROCK	TOP 40
	CLS ROCK
	ROCK
EASY LIS	SOFT
	ADLT HIT
	OLDIES
CLS/JAZZ	CLASSICL
	JAZZ
	NOSTALGA
	PUBLIC
COUNTRY	COUNTRY
R AND B	R AND B
	SOFT R/B
INFO	NEWS
RELIGION	REL MUSC
	REL TALK
MISC	LANGUAGE
	MISC

1. **Select Format Seek mode.**

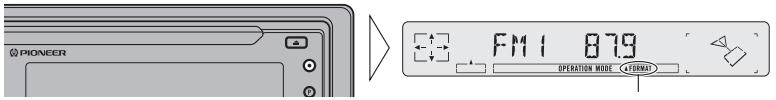

"FORMAT"

To cancel Format Seek mode, repeat the preceding operation.

2. **Select a group format.**

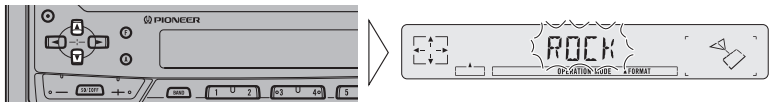

A station broadcasting a program with a different group format from the format of the currently received broadcast station is selected.

Press the ▲ button to select stations with the next group format, and the ▼ button to select stations with the preceding group format.

3. **Select a station.**

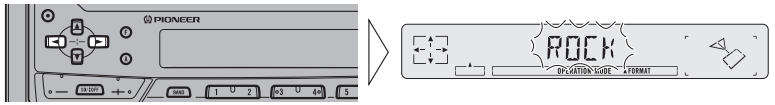

A station broadcasting a program with the same group format as the currently received broadcast station is selected.

Press the ► button to select a station with a higher frequency and the ◄ button to select a station with a lower frequency.

Note:

- If you perform operation 3 during reception of a broadcast station with no format data, "NO FORMAT" is displayed.
  The tuner then returns to the prior frequency.
- "NO STATION" is displayed if no station with the selected group format can be received.
  The tuner then returns to the prior frequency.
- "NO DATA" will be displayed if there is no station data for the specified group format stored in the ID LOGIC database.
- If the set vehicle location is different from the current location, the selected group format and the format of the program may differ.
- If "MS" is displayed, refer to the "6. Multi-Station" section.
- You can also select and cancel the Format Seek mode when in the Function Menu SEEK SEL mode.

3. Format Best Stations Memory (FRMT-BSM)

This function automatically places receivable stations into presets 1 – 6, in order from strongest to weakest, for a selected group format.

Firstly, choose your desired group format as described in "2. Format Tuning".

1. **Press the FUNCTION button and select the Format BSM mode (FRMT-BSM) in the Function Menu.**

2. **Start Format BSM.**

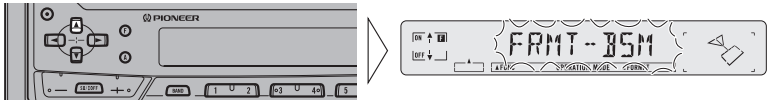

To cancel Format BSM midway, press the ▼ button.

When Format BSM is completed, "FRMT-BSM" in the display stops flashing.

3. **Select a preset station by pressing a button 1 – 6. (eg. Press button 1.)**

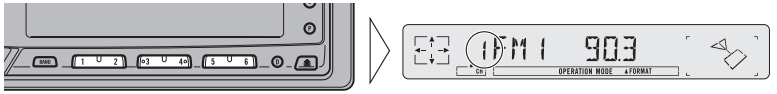

Note:

- In areas where there are not 6 or more stations covered by format tuning, the previously stored contents may be retained.
- If "MS" is displayed, refer to the "6. Multi-Station" section.

4. Format Scan (FRMT-SCAN)

This function allows you to scan receivable stations with the same format type as that of the present station that you are listening to.

1. **Press the FUNCTION button and select the Format Scan mode (FRMT-SCAN) in the Function Menu.**

2. **Start Format Scan.**

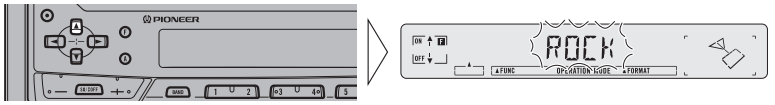

Stations with the same format are tuned one after another at 8 second intervals.

Continued overleaf.

3. **Cancel the scan function and enable you to remain tuned to the present station.**

   If the Function Menu has been canceled automatically, select the Format Scan mode in the Function Menu again.

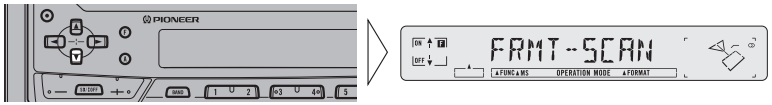

To cancel the Function Menu, press the BAND button.

Note:
- If “MS” is displayed, refer to the “6. Multi-Station” section.

5. Display Modes

This function can be used to scroll through the various display modes for Band/Frequency, Call Sign/Frequency and Format.

- **By pressing CLOCK/DISP button it is possible to scroll through the various displays.**

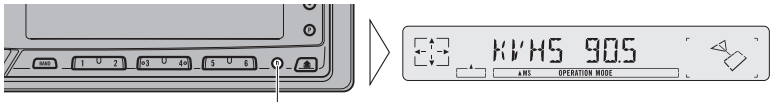

Each press changes the Display ...

Note:
- You cannot switch to these displays if Call Sign and Format data for the station you are receiving are not stored in the tuner.
- If the set vehicle position is different from the current location, a different Format and Call Sign from those of the tuned-in station may be displayed.
- The program of some stations may differ from that indicated by their Format.

6. Multi-Station (MULTI ST)

When “MS” is displayed, this indicates there are a number of stations having the same broadcasting frequency stored in the ID Logic database.

For example, if you have performed Format Tuning; you may be listening to a station with a different format type than which you chose.

“MS”

- **Display Call Sign or Format indications, and confirm that Call Sign and Format agree with those of the program being broadcast.**

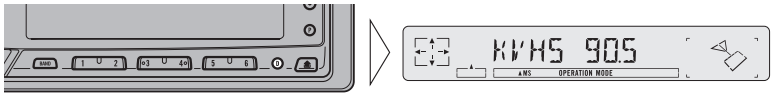

Note:
- If the format of the program differs from the format you want to listen to, perform Format Tuning, Format BSM or Format Scan again.
- If the Call Sign and Format do not agree with those of the program, display indications change.

Changing Multi-Station Format

1. **Press the FUNCTION button and select the Multi-Station mode (MULTI ST) in the Function Menu.**

2. **Select Format.**

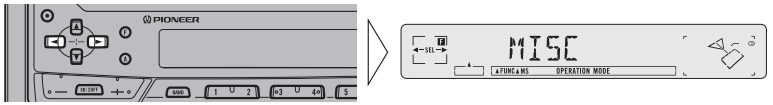

Pressing the button switches the Format of the station broadcasting on the frequency currently being received. Select the appropriate Format for the broadcast.

To cancel the Function Menu, press the BAND button.

Using the Built-in CD Player

Scan Play (T-SCAN)

Scan Play plays the first 10 seconds or so of each track on a CD in succession.

1. **Press the FUNCTION button and select the Scan mode (T-SCAN) in the Function Menu.**

2. **Switch the Scan Play ON with the ▲ button.**

3. **When you find the desired track, cancel scan play with the ▼ button.**

   If the Function Menu is automatically canceled at this time, select the Scan mode in the Function Menu once more.

Note:
- Scan Play is canceled automatically after all the tracks on a disc have been scanned.

Pause (PAUSE)

Let's you pause play of the track currently playing.

1. **Press the FUNCTION button and select the Pause mode (PAUSE) in the Function Menu.**

2. **Switch the Pause ON/OFF with the ▲/ ▼ buttons.**

Note:
- One-touch operation is possible with the remote controller.

Disc Title Input (TITLE IN)

You can use "TITLE IN" to input up to 48 disc titles for CDs in the built-in CD player. (Refer to "Disc Title Input"on page 45 under "Using Multi-CD Players".)

Note:
- If you connect a Multi-CD player, you can input disc tiles for up to 100 discs.

Using Multi-CD Players

Repeat Modes (REPEAT)

There are four repeat modes (play range): One-track Repeat, Disc Repeat, Multi-CD player Repeat (the selected Multi-CD player) and All Repeat (all Multi-CD players). (Default mode is Multi-CD player Repeat.)

1. **Press the FUNCTION button and select the Repeat Selecting mode (REPEAT) in the Function Menu.**

2. **Select the desired Repeat Mode with the ◄/► buttons.**

   Multi-CD player Repeat ("MCD" is displayed) → All Repeat ("ALL" is displayed) → One-track Repeat ("TRK" is displayed) → Disc Repeat ("DSC" is displayed)

Note:
- All Repeat is available only when two or more multi-CD players are installed.
- If you go beyond the play range of the selected repeat mode by performing Track Search, Fast forward/Reverse or selecting another disc or Multi-CD player, the mode changes to an applicable Repeat mode.

Random Play (RANDOM)

Tracks are played at random within the selected repeat mode play range as explained in "Repeat Modes" above.

1. **Press the FUNCTION button and select the Random mode (RANDOM) in the Function Menu.**

2. **Switch the Random Play ON/OFF with the ▲/ ▼ buttons.**

   After selecting the desired repeat mode play range from those referred to in "Repeat Modes" above, switch Multi-CD Player Random Play ON.

Display	Play range
D-RDM	Disc Repeat
M-RDM	Multi-CD player Repeat
RDM	All Repeat

8.2 SPECIFICATIONS

General

Power source ..... 14.4 V DC (10.8 – 15.1 V allowable)
Grounding system ..... Negative type
Max. current consumption (DEH-P645, 56, 545).... 10.0 A
Max. current consumption (DEH-P46, 445, 41)..... 8.5 A
Dimensions
(DIN) (chassis) ..... 178 (W) × 50 (H) × 150 (D) mm
[7 (W) × 2 (H) × 5-7/8 (D) in.]
(nose) ..... 188 (W) × 58 (H) × 19 (D) mm
[7-3/8 (W) × 2-1/4 (H) × 3/4 (D) in.]
(D) (chassis) ..... 178 (W) × 50 (H) × 155 (D) mm
[7 (W) × 2 (H) × 6-1/8 (D) in.]
(nose) ..... 170 (W) × 48 (H) × 14 (D) mm
[6-3/4 (W) × 1-7/8 (H) × 5/8 (D) in.]
Weight ..... 1.4 kg (3.1 lbs)

Amplifier

Continuous power output is 20 W per channel min. into 4 ohms, both channels driven 50 to 15,000 Hz with no more than 5% THD.
Maximum power output (DEH-P645, 56, 545) .. 40 W × 4
Maximum power output (DEH-P46, 445, 41) ..... 35W × 4
Load impedance ..... 4 Ω (4 – 8 Ω allowable)
Preout output level/output impedance ..... 500 mV/1 kΩ
Tone controls
(Bass) ..... ±12 dB (100 Hz)
(Treble) ..... ±12 dB (10 kHz)
Loudness contour ..... +10 dB (100 Hz), +7 dB (10 kHz)
(volume: –30 dB)

CD player

System ..... Compact disc audio system
Usable discs ..... Compact disc
Signal format ..... Sampling frequency: 44.1 kHz
Number of quantization bits: 16; linear
Frequency characteristics ..... 5 – 20,000 Hz (±1 dB)
Signal-to-noise ratio ..... 94 dB (1 kHz) (IHF-A network)
Dynamic range ..... 90 dB (1 kHz)
Number of channels ..... 2 (stereo)

FM tuner

Frequency range ..... 87.9 – 107.9 MHz
Usable sensitivity ..... 11 dBf
(1.0 µV/75 Ω, mono, S/N: 30 dB)
50 dB quieting sensitivity .... 16 dBf (1.7 µV/75 Ω, mono)
Signal-to-noise ratio ..... 70 dB (IHF-A network)
Distortion ..... 0.3% (at 65 dBf, 1 kHz, stereo)
Frequency response ..... 30 – 15,000 Hz (±3 dB)
Stereo separation ..... 40 dB (at 65 dBf, 1 kHz)
Selectivity ..... 70 dB (2ACA)
Three-signal intermodulation
(desired signal level) ..... 30 dBf
(two undesired signal level: 100 dBf)

AM tuner

Frequency range ..... 530 – 1,710 kHz
Usable sensitivity ..... 18 µV (S/N: 20 dB)
Selectivity ..... 50 dB (±10 kHz)

PIONEER®
The Art of Entertainment

Service Manual

ORDER NO.
CRT1829

CD MECHANISM MODULE

CX-597

- **This service manual describes the operation of the CD mechanism incorporated in models listed in the table below.**
- **When performing repairs use this manual together with the specific manual for model under repair.**

Model	Service Manual	CD Mechanism Module	CD Mechanism Unit
DEH-P825R/EW, DEH-P825/UC DEH-P823/ES, DEX-P99/UC	CRT1805	CXK5011	CXA8880
DEH-P725R/EW, DEH-P725R-W/EW DEH-P725/UC, DEH-P725-W/UC DEH-P723/ES, DEH-P625/UC DEX-P88/UC, DEX-P77R/EW	CRT1812	CXK5001	CXA8870
DEH-625R/EW, DEH-624R/EW DEH-525R/EW, DEH-524R/EW DEH-424R/GR, DEH-424/EW DEH-425/IT	CRT1808	CXK5001	CXA8870
DEH-59/UC, DEH-52/UC DEH-525/UC, DEH-49/UC DEH-42/UC, DEH-425/UC DEH-225/UC, DEH-523/ES DEH-323/ES, DEH-223/ES	CRT1809	CXK5001	CXA8870

CONTENTS

1. THE SUMMARY OF CIRCUITS 2
2. THE SUMMARY OF STRUCTURE 15
3. DISASSEMBLY AND ASSEMBLY 17

PIONEER ELECTRONIC CORPORATION 4-1, Meguro 1-Chome, Meguro-ku, Tokyo 153, Japan
PIONEER ELECTRONICS SERVICE INC. P.O.Box 1760, Long Beach, CA 90801-1760 U.S.A.
PIONEER ELECTRONIC [EUROPE] N.V. Haven 1087 Keetberglaan 1, 9120 Melsele, Belgium
PIONEER ELECTRONICS ASIACENTRE PTE.LTD. 501 Orchard Road, #10-00, Lane Crawford Place, Singapore 0923

© PIONEER ELECTRONIC CORPORATION 1996

K-GFA. FEB. 1996 Printed in Japan

1. THE SUMMARY OF CIRCUITS

1.1 PRE-AMP SECTION (UPC2572GS: IC101)

This section processes the pickup output signals to create the signals for the servo, demodulator & control.

The pickup output signals are I-V converted by the pre-amp with built in photo-detector in the pickup, and added by the RF amp (IC101) to obtain the RF, FE, TE, TE zero cross, and other signals.

The main component is the UPC2572GS and each section is explained below. Because this system has a single power supply (+5V), the reference voltage for this IC, the PU and the servo circuit is the voltage REFO (+2.5V). The REFO signal is obtained by buffering REFOUT from the servo LSI (IC201: UPD63702GF) and is available from Pin 19 of IC101. All measurements should be done using this REFO as reference.

Note: During measurement, do not short REFO and GND.

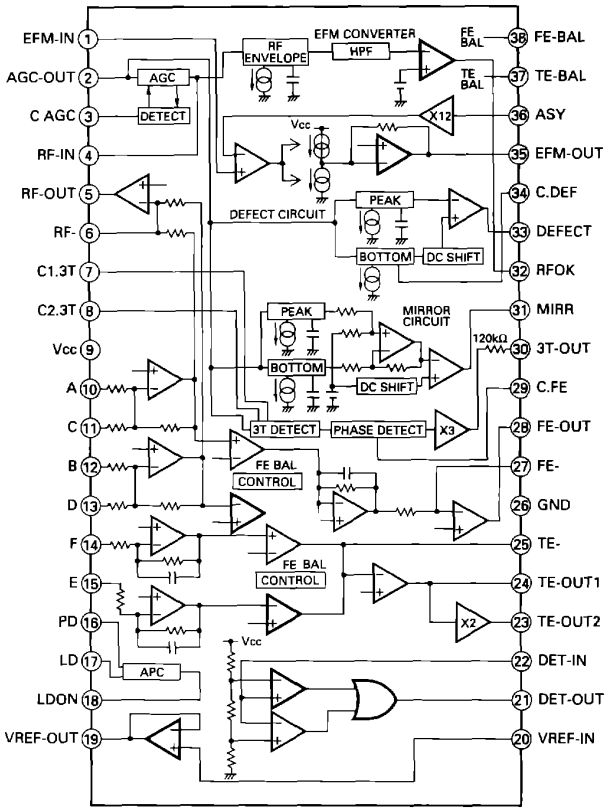

Fig.1 : UPC2572GS BLOCK DIAGRAM

1) APC Circuit (Automatic Power Control)

When the laser diode is driven with constant current, the optical output has large negative temperature characteristics. So the current must be controlled to hold the output constant with the monitor diode. The circuit that carries out this function is the APC circuit. The LD current is obtained by measuring the voltage between LD1 and ground and the value of this current is about 35mA.

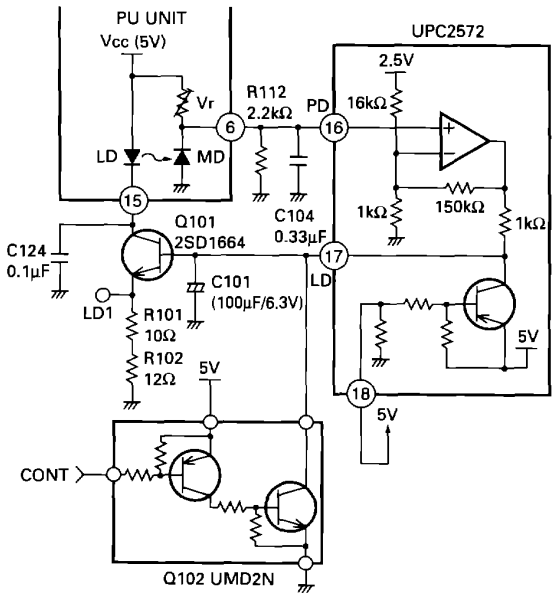

Fig.2 : APC CIRCUIT

2) RF Amp, RF AGC Amp

The photo-detector outputs (A+C) and (B+D) are added, amplified, and equalized in IC101 and output to the RFI pin. (The eye pattern can be checked at this pin.)

The RFI voltage low-frequency component is:

RFI = (A+B+C+D) × 3.22

R111 is the offset resistor for holding the RFI signal in the pre-amp's output range. The RFI signal is AC coupled and input to Pin 4 (RFIN pin).

This IC contains an RF AGC circuit, which holds the RFO output at Pin 2 at a fixed level (1.2 ± 0.2Vp-p). This RFO signal is used in the EFM, DFCT, and MIRR circuits.

3) EFM Circuit

This circuit, "squares" up the analog RF signal into a digital EFM signal. In order to ensure minimum errors it is necessary to use a feedback circuit to match the DC level of the threshold to the center of the RF waveform.

This circuit uses the fact that the EFM signal should have no DC component. By feeding back the EFM signal's DC level the threshold level changes until the DC level is zero and the threshold, by definition, is at the exact center of the RFO waveform. The filtering in the feedback has been adjusted to ensure minimum error. The EFM signal is output from Pin 35. The signal is a 2.5Vp-p amplitude signal centering on REFO.

4) DFCT (Defect) Circuit

The DFCT circuit detects defects on the disc surface, and outputs a "H" signal from Pin 33.

If there is dirt on the disc, drop outs may appear. The DFCT signal output is input to the servo LSI HOLD pin and the focus and tracking servo drives are held while the DFCT output is "H" in order to improve playability.

5) RFOK Circuit

This circuit produces the signal indicating the focus close state during play and the timing for closing the focus servo. This signal is output from Pin 32. This RFOK signal output is input to the servo LSI RFOK pin and the focus close command is issued by the servo LSI. This signal is high during play when the focus is closed.

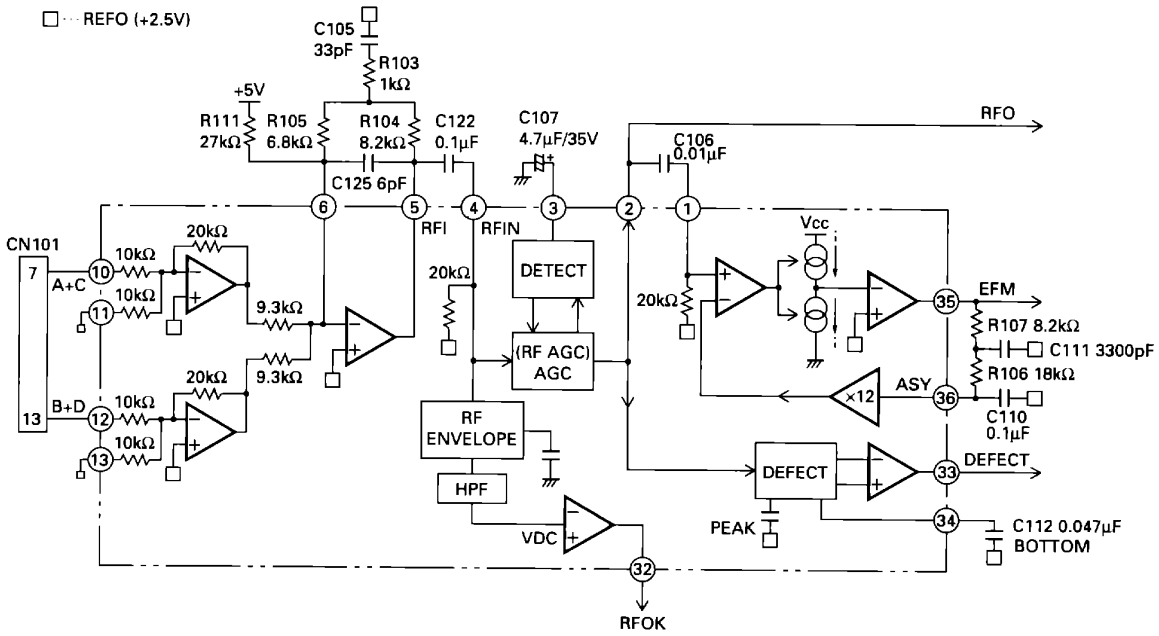

Fig.3 : RF AMP, RF AGC, EFM, DFCT, RFOK CIRCUIT

6) Focus Error Amp

The photo-detector outputs (A+C) and (B+D) are passed through a differential amp, and an error amp and (A+C-B-D) is output from Pin 28 as the FE signal.
The FEY voltage low-frequency component is:

$$FEY = (A+C-B-D) \times \frac{20k\Omega}{10k\Omega} \times \frac{90k\Omega}{68.8k\Omega} \times \frac{R108}{17.2k\Omega}$$

: (PU FE level × 5.02)

An S curve of about 1.6Vp-p is obtained with REFO as the reference. The final-stage amp cutoff frequency is 12.4kHz.

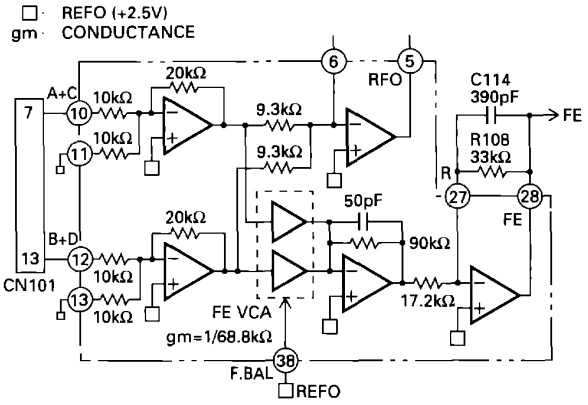

Fig.4 : FOCUS ERROR AMPLIFIER

7) Tracking Error Amp

The photo-detector E and F outputs are passed through a differential amp and an error amp and (E-F) is output from Pin 24 as the TE signal.
The TEY voltage low-frequency component is:

$$TEY = (E-F) \times \frac{63k\Omega}{(31k\Omega+16k\Omega)} \times \frac{R109}{17k\Omega}$$

: (PU TE output level × 5.36)

The TE waveform of about 1.5Vp-p with REFO as the reference is obtained as the TE output (Pin 24). The final-stage amp cutoff frequency is 19.5kHz.

8) Tracking Zero Crossing Amp

The tracking zero crossing signal (below, TEC signal) is the TE waveform (Pin 24 voltage) amplified four times and is used to find the zero crossing points of the tracking error with the UPD63702GF servo LSI. This zero crossing point is found for the following two reasons.

(1) To count tracks for carriage moves and track jumps
(2) To detect the direction in which the lens is moving for tracking closing (This is used in the tracking brake circuit, described Page 9 b).)

The TEC signal frequency range is 500Hz - 19.5kHz.

TEC voltage = TE level × 4

In other words, the TEC signal level is calculated at 6Vp-p. This level exceeds the op-amp's output range and the signal is clipped, but this can be ignored because this signal is used by the servo LSI only at the zero crossing point.

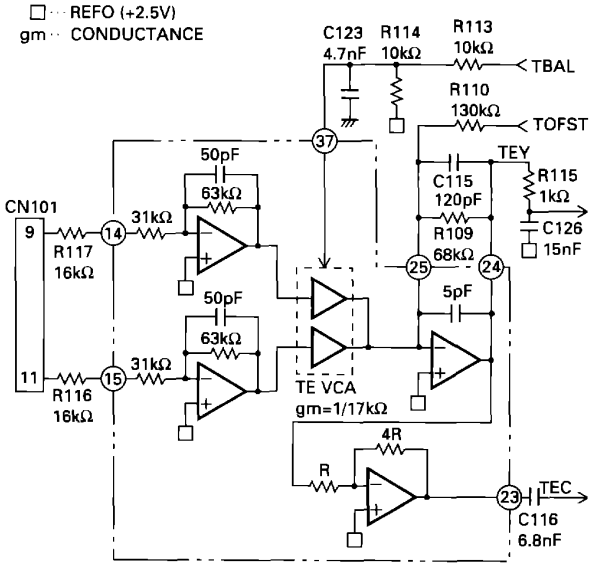

Fig.5 : TRACKING ERROR AMPLIFIER & TRACKING ZERO CROSSING AMPLIFIER

9) MIRR (Mirror) Circuit

The MIRR signal shows the on track and off track data and is output from Pin 31.

When the laser beam is

On track: MIRR = "L"

Off track: MIRR = "H"

This signal is used in the brake circuit, described Page 9 b).

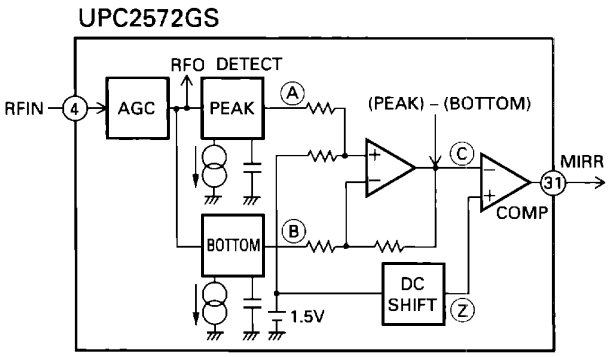

Fig.6 : MIRR CIRCUIT

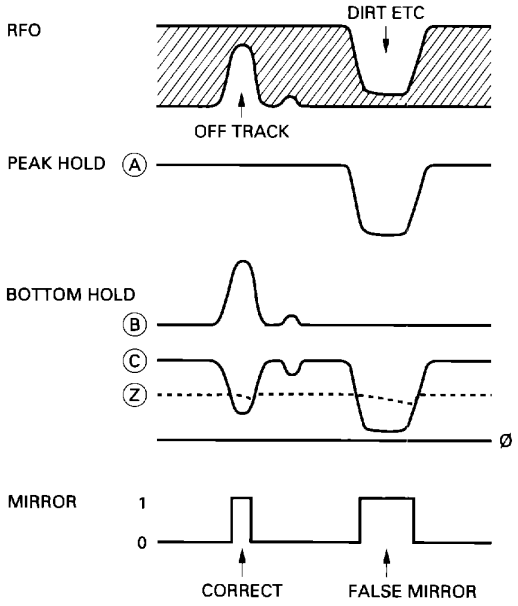

Fig.7 : MIRR CIRCUIT & SIGNAL DIAGRAM

10) 3TOUT Circuit

This circuit detects variations of the RF signal when an external interference is input into the focus servo loop and outputs the phase difference between the FE signal and the RF level variation signal from Pin 30. The signal has been passed through a low-pass filter (fc = 40Hz). This signal is used for the FE bias automatic adjustment, described Page 12 4).

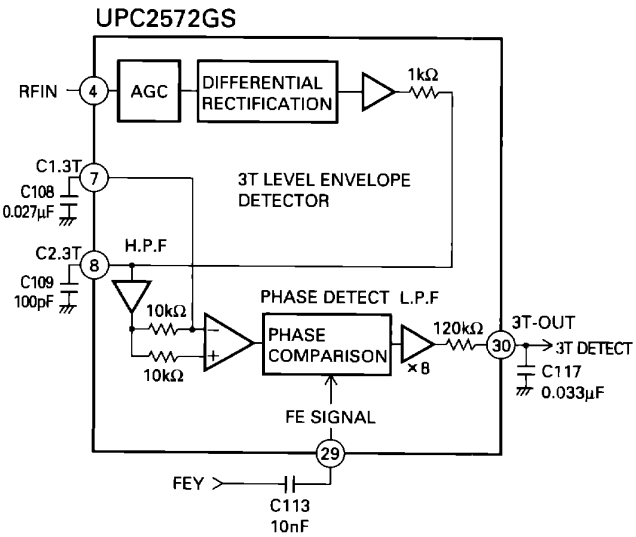

Fig.8 : 3T OUT CIRCUIT

1.2 SERVO SECTION (UPD63702GF: IC201)

This section can be divided into two parts.
One is the servo processing section, which handles such servo controls as error signal equalizing, in focus, track jump, and carriage move. The other is the signal processing section, which handles data decoding, error correction, and interpolation processing.
This IC converts the FE and TE signals from analog to digital and outputs the focus, tracking, and carriage drive signals via the servo block. Also, the EFM signal from the pre-amp is decoded in the signal processing section and finally output as audio signals after D/A conversion. (This IC has a built in audio digital-analog converter.) The decoding process also creates the spindle servo error signals, which is fed to the spindle servo block to create the spindle drive signal.
The focus, tracking, carriage, and spindle drive signals are then amplified by IC301, XLA6997FP and fed to their respective actuators and motors.

1) Focus Servo System

The main focus servo equalizer is in the UPD63702GF. Figure 9 is the focus servo block diagram.
In the focus servo system, the lens must be brought within the in-focus range for focus closing. Therefore, the lens is raised and lowered according to the triangular focus search voltage to find the focus point. During this time the spindle motor is kicked and kept rotating at a set speed.
The servo LSI monitors the FE signal and the RFOK signal and automatically carries out the focus close operation at the appropriate point.
Focus closing is carried out when the following four conditions are all met.
(1) The lens is moving from far to near toward the disc surface.
(2) RFOK = H
(3) The FZD signal (within the IC) is latched at high.
(4) FE = 0 (REFO reference)

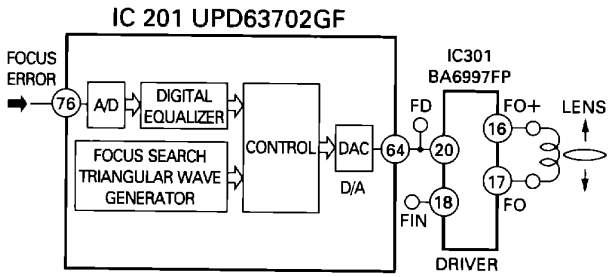

Fig.9 : FOCUS SERVO BLOCK DIAGRAM

When the above conditions are all met and the focus is closed, the XSO signal is shifted from high to low, then 40ms later, the microcomputer begins to monitor the RFOK signal that is passed through the low pass filter.
When the RFOK signal is judged to be low, the microcomputer carries out various actions such as protection.
Figure 10 shows the series of operations for focus closing (for the case where focus cannot be closed.) Also, in focus-mode-selection during test mode when the display is 01, if the focus close button is pressed, the S curve, search voltage, and actual lens movements can be checked.

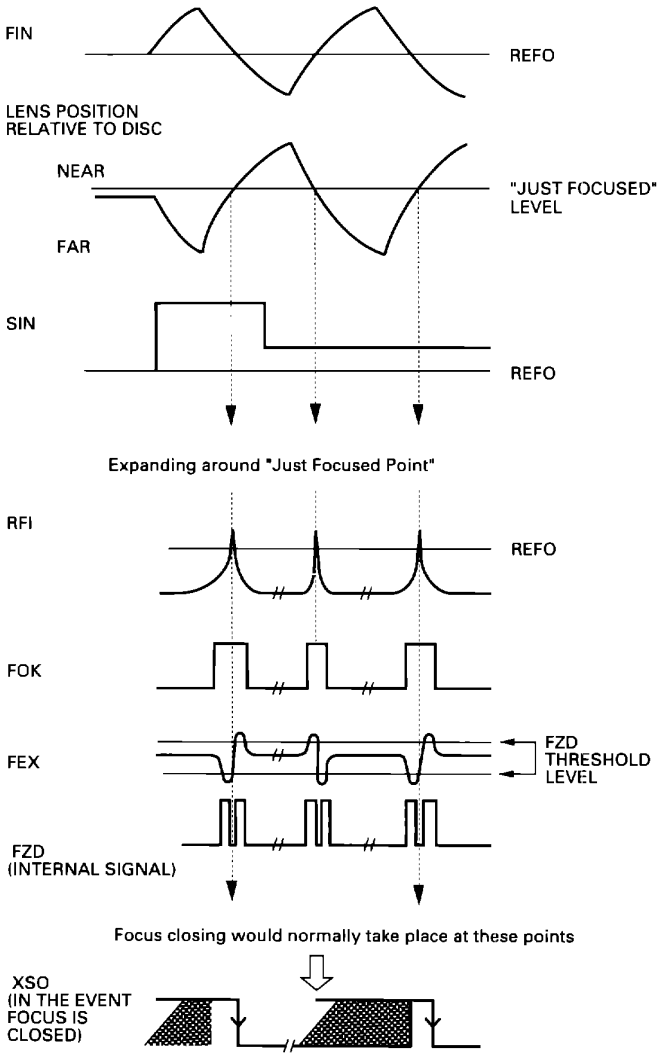

Fig.10 : FOCUS CLOSING SEQUENCE

2) Tracking Servo System

The main tracking servo equalizer is in the UPD63702GF. Figure 11 is the tracking servo block diagram.

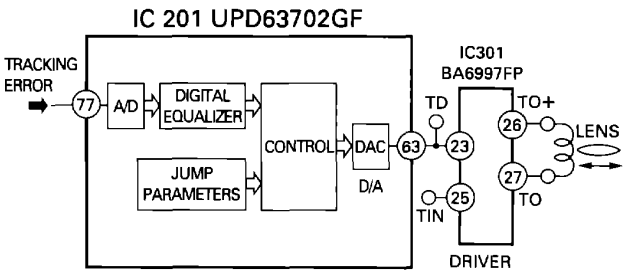

Fig.11 : TRACKING SERVO BLOCK DIAGRAM

a) Track Jump

When the LSI receives the track jump command from the microcomputer, the track jump is carried out automatically by the auto sequence function within the LSI. This system has six types of track jumps used for searches: 1, 4, 10, 32, 32 × 2, and 32 × 3. In test mode, in addition to these jumps, CRG moves can be executed and checked by mode selection. For track jumps, the microcomputer sets half of the total number of jumps (2 tracks for a 4 track jump) and counts the set number of tracks using the TEC signals. From the point when it has counted the set number of tracks, it outputs the brake pulse for a fixed period of time (set by the microcomputer) to stop the lens. In this way, it can close the tracking and continue normal play.

To improve the servo loop re-closing performance just after track jump, the brake circuit comes on for 60ms after the end of the brake pulse and the tracking servo gain is increased.

Fast forward and reverse operations in normal mode are realized by executing consecutive single track jumps. The speed is about 10 times as high as in normal play.

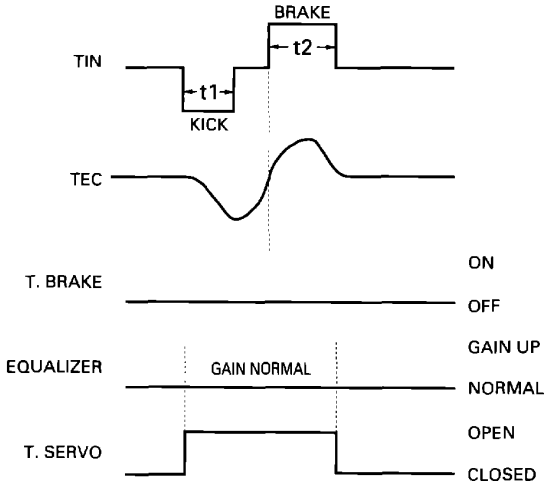

Fig.12 : SINGLE TRACK JUMP

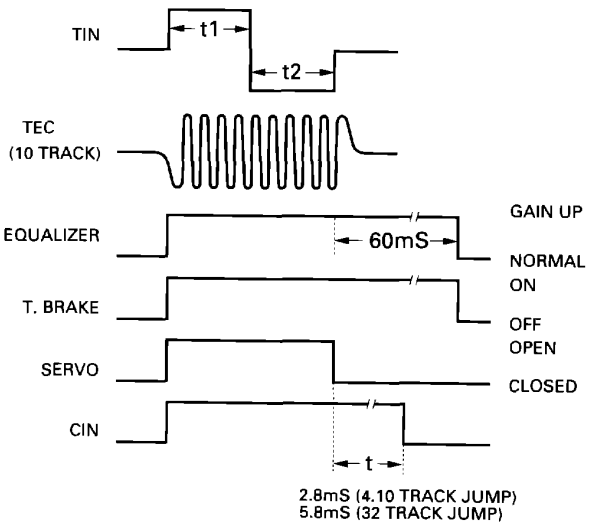

Fig.13 : MULTI-TRACK JUMP

b) Brake Circuit

This relies on determining which direction the lens is moving and only outputting the portion of the drive waveform which acts to oppose this motion. Direction of motion is deduced from TEC and the MIRR signal and knowledge of their phase relation.

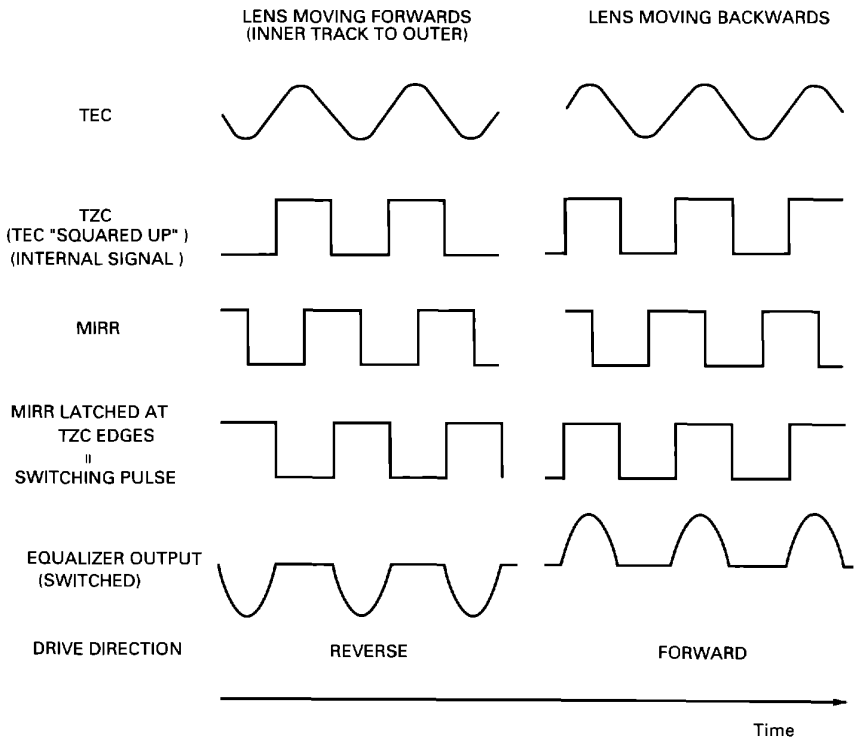

Note: Equalizer output assumed to hava same phase as TEC.

Fig.14 : TRACKING BRAKE CIRCUIT

3) Carriage Servo System

The carriage servo supplies the tracking equalizer's low-frequency component (lens position information) output to the carriage equalizer and after applying a fixed amount of gain, outputs the drive signal from the servo LSI. This signal is applied to the carriage motor through the driver IC.

When the lens offset reaches a certain level during play, the entire PU must be moved in the forward direction. Therefore, the equalizer gain is adjusted to output a voltage higher than the carriage motor starting voltage. In actual operations, a certain threshold level is set for the equalizer output within the servo LSI and the drive voltage is output from the servo LSI only when the equalizer output level exceeds that threshold level. This reduces power consumption. Also, due to disc eccentricity and other factors, the equalizer output voltage may cross the threshold level a number of times before the entire PU starts to move. In this case, the drive voltage waveform, (which is applied) from the LSI, becomes pulsative.

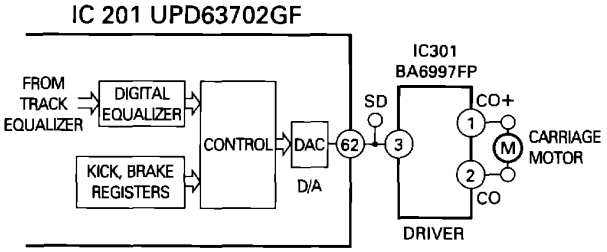

Fig.15 : CARRIAGE SERVO CIRCUIT

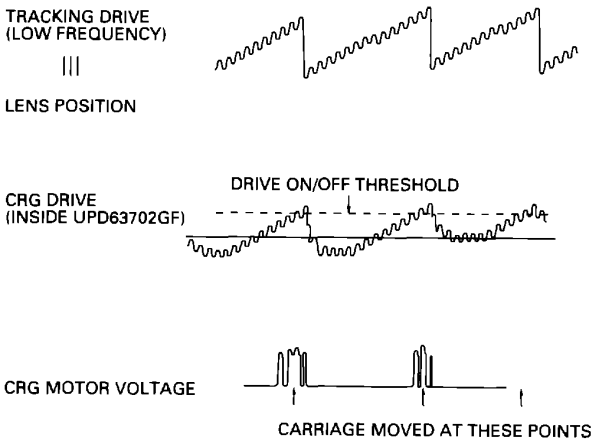

Fig.16 : CARRIAGE WAVEFORM

4) Spindle Servo System

The spindle servo has the following modes.

(1) Kick: The mode used for disc rotation acceleration during setup

(2) Offset:

a) Used during setup from the end of kick until the AGC end

b) Used during play when the focus is unlocked until it is recovered

Both of these are for holding the disc rotation rate near the normal rotation rate.

(3) Adaptive servo: CLV servo mode for normal operation

In the EFM demodulation block, the frame sync signal and internal frame counter output signal are sampled each WFCK/16 and a signal is produced indicating whether or not they match. Only after this signal is in non-match mode eight consecutive times, is the system treated as out of sync, at other times it is treated as in sync. In this adaptive servo mode, a servo mode for pulling the system into sync is automatically selected when the system is out of sync and the regular servo is automatically selected when the system is in sync.

(4) Brake: The mode for stopping the spindle motor rotation

The brake voltage is output by the microcomputer from the servo LSI. At this time, the EFM wave form is monitored within the LSI and if the longest EFM pattern exceeds a certain interval (when the rotation is slow enough), a flag is registered within the LSI and the microcomputer switches the brake voltage off. If the flag is not registered within a certain period of time, the microcomputer switches from brake mode to stop mode which lasts for a fixed period of time. In this case, ejection of the disc can only occur after this period of time.

(5) Stop: The mode used during power on and ejection

At this time, the voltage across the spindle motor is 0V.

(6) Rough servo: The mode used for carriage feed (carriage move during a long search)

The linear speed is calculated from the EFM wave form and a high level or low level is input to the spindle equalizer. In test mode, this mode is also used for the grating check.

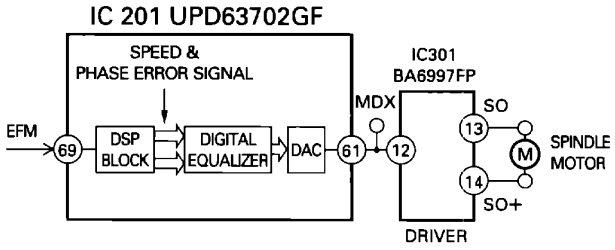

Fig.17 : SPINDLE SERVO BLOCK DIAGRAM

1.3 AUTOMATIC ADJUSTMENT FUNCTIONS

This system uses a pre-amp (UPD2572GS) and servo LSI (UPD63702GF) to automate all circuit adjustment. All adjustments are carried out automatically each time a disc is inserted or the CD mode is selected with the source key. Here is how each automatic adjustment works.

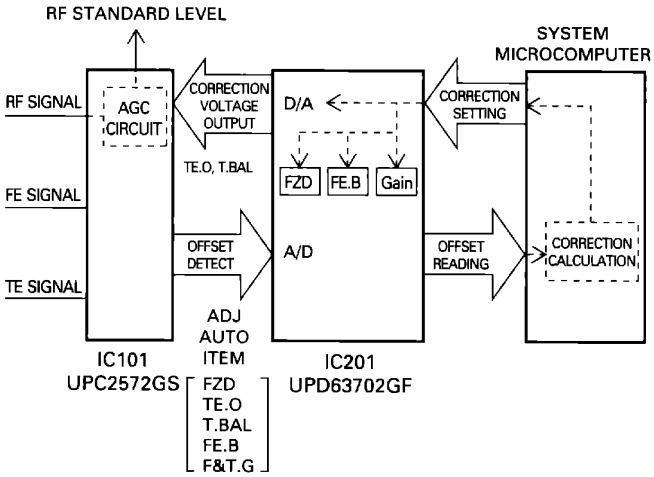

Fig.18 : AUTOMATIC GAIN CONTROL

1) FZD Cancel Setting

This setting is to make the focus closing reliable. When the power is switched on, the FE offset level is read and a voltage opposite to this offset value is written to the CRAM in the IC to cancel the offset. In this way, the FZD threshold level can be set to a constant value (+150mV) and one of the conditions within the IC for focus closing "that the FZD signal is latched at high" can be fulfilled reliably.

2) TE Offset Automatic Adjustment

This function adjusts the pre-amp TE amp offset to 0 V when the power is switched on.

The adjustment procedure is:

(1) The TE offset (LD off) is read by the microcomputer via the servo LSI (offset = TE1).

(2) The microcomputer calculates the voltage to be corrected from the value of TE1 and sets the output of Pin 65 of the servo LSI (signal name: TOFST). The concrete calculation method is as follows.

TOFST2 = TOFST1 + TE1 × R110/R109

3) Tracking Balance Automatic Adjustment

This adjustment equalizes the difference in sensitivity of the E channel and F channel of the TE output. In actual practice, the TE waveform is adjusted to be vertically symmetrical about REFO.

The adjustment procedure is:

(1) After focus closing, the lens is kicked in the radial direction to reliably generate the TE waveform.

(2) At this time, the microcomputer reads the peak and bottom of the TE waveform through the servo LSI.

(3) The microcomputer calculates the value of the offset and the correction voltage to output from Pin 66 of the servo LSI (signal name: TBAL).

(4) The voltage output from the servo LSI is input to Pin 37 of the pre-amp (IC101: UPC2572). This pin is the TEVCA amp control voltage pin. The gain for the E channel and F channel within the pre-amp is varied according to the input voltage to adjust the tracking balance and make the TE waveform vertically symmetrical about REFO.

4) FE Bias Automatic Adjustment

This adjustment is made to maximize the RFI level during play by optimizing the focus point. This adjustment utilizes the phase difference between the RF waveform 3T level signal and the focus error signal. Since an external interference is input into the focus loop, this adjustment uses the same timing as the auto gain control, explained below.

The adjustment procedure is:

(1) External interference is injected into the focus loop by command from the microcomputer (within the servo LSI).

(2) The RF signal 3T component level variation is detected within the pre-amp.

(3) The phase difference between the FE signal due to external interference input and the above 3T component is detected, to sense the focus deviation direction, and the result is output as a DC voltage from Pin 30 (3T-OUT) of the pre-amp.

(4) The 3T-OUT voltage is input to Pin 75 (A/D port) of the servo LSI and the microcomputer reads the 3T-OUT voltage through the servo LSI.
(5) The microcomputer calculates the required correction and adjusts the focus loop offset in the servo LSI.

In the same manner as the auto gain control, this adjustment is repeated a number of times to raise the adjustment precision.

5) Auto Gain Control (AGC)

This adjustment has already been used in the previous generation of CD modules. This function automatically adjusts the focus and tracking servo loop gain.

The adjustment procedure is:

(1) External interference is injected into the servo loop.
(2) The error signals (FE, TE) when the external interference is injected are passed through a band pass filter and the G1 and G2 signals are obtained.
(3) The microcomputer reads the G1 and G2 signals through the servo LSI.
(4) The microcomputer calculates the required correction and adjusts the loop gain within the servo LSI.

To raise the adjustment precision, the same adjustment procedure is repeated a number of times.

6) Initial Adjustment Values

All the automatic adjustments use the previous adjustment value as the initial value as long as the microcomputer power supply is not cut off (the backup is not cut off). If the backup is cut off, automatic adjustment does not start from the previous adjustment value, but rather from the default setting.

7) The Coefficient Display for Adjustment Result

The results of all automatic adjustments can be displayed and checked in test mode.

The coefficient displays for each automatic adjustment are as follows.

(1) FZD cancel, TE.OFST cancel, T.BAL, FE.bias
Reference value = 32 (A coefficient of 32 indicates that no adjustment was necessary).
The display is in units of about 40mV.
Example: FZD cancel coefficient = 35
35-32 = 3 $3 \times 40mV = 120mV$
Since the corrected value is approximately + 120mV, the FE offset before adjustment was - 120mV.

(2) Focus and tracking gain adjustment
Reference value: Focus = 13, tracking = 20
The coefficient display shows the gain derease relative to the reference value.
Example: AGC coefficient = 40
Gain = 20log (20/40) = - 6dB

1.4 POWER SUPPLY AND LOADING SECTION

The power supply within the system makes the loading motor drive power supply VM (7.6V) and 5V Reg IC power (6.9V) from VD (8.3V) supplied by the mother board. The disc detection LED drive voltage and the CD driver IC power supply use VD directly.

The microcomputer switches the CD driver and laser diode on/off with "CONT" and switches the 5V power on/off with "CD5VON". There is no particular control pin for the loading motor driver, but the "EJ" and "LOAD" input signals serve the same role.

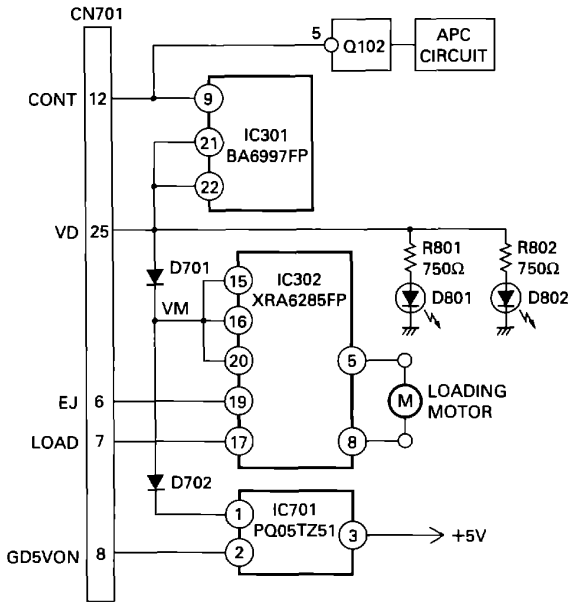

Fig.19 : POWER SUPPLY & LOADING SECTION

2. THE SUMMARY OF STRUCTURE

● Disc Loading Operations

1. There are two photo transistors before and after the rubber roller that conveys the disc. They receive light from the corresponding two LEDs. (When light is received, the photo transistor voltage is low.)
2. When a disc is inserted to just before the rubber roller, the front section photo transistor (P1) voltage goes high and the loading motor drive starts.
3. The drive power of the motor is transmitted by gear and the rubber roller rotates to transport the disc.
   The rubber roller is at one end of the loading arm and lifts up the guide arm. The guide arm is positioned by two springs. Therefore the guide arm and the rubber roller provide the appropriate pressure to feed out the disc between them.
4. The clamper arm also has a disc centering mechanism that discriminates the size of the disc and clamps the disc at the center of the spindle motor. The centering arms form a set left and right on the clamper arm and can move centering on their pivots. At the end of the centering arms are the lock arms. (The lock arms rotate about the centering pins and are locked to the clamper arm for 8cm discs.)
   For 12cm discs, the lock arms are unlocked and move to the position indicated in Figure 21.
   The detection arm, which has its center of rotation on the centering arm on the right side of the diagram, has different positions for 8cm and 12cm discs. When one of these discs is positioned on the spindle, the detection arm moves clockwise according to the external diameter of the disc and moves the detection lever to the bottom side of the figure.

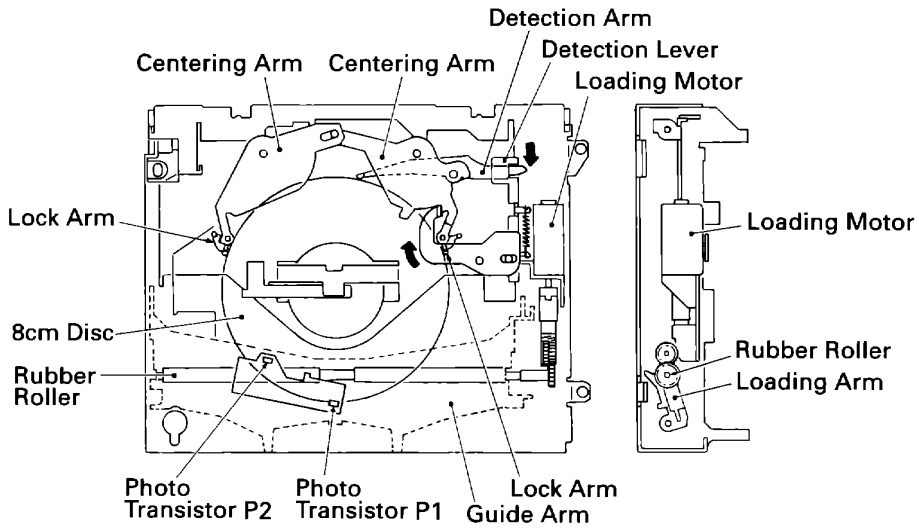

Fig.20

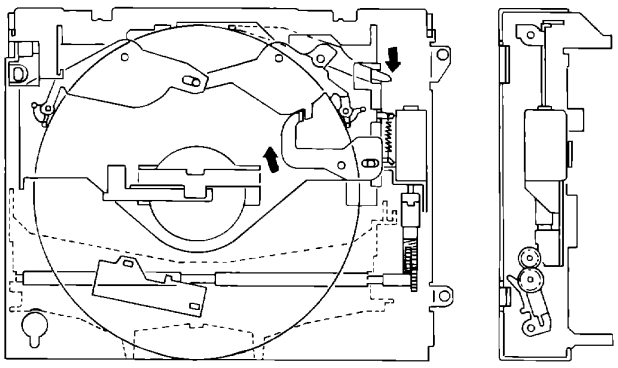

Fig.21

● Clamp Operation

The rack gear touching the detection lever meshes with the gear driven by the loading motor and rotates the L arm in the direction of the arrow in Figure 23.
The clamper arm, lifted up by the L arm, descends and clamps the disc. Also, the lock lever linked with the L arm moves the loading arm.
Because of this, the rubber roller descends, separating from the disc. At the same time the guide arm also descends. Loading ends at the position where the lock lever switches on the clamp switch.

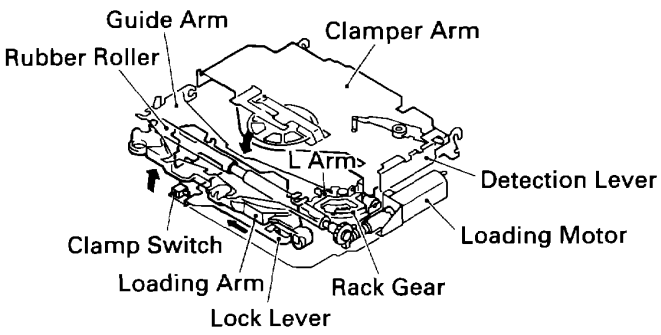

Fig.22

● Mechanism Lock Operation

1. In the eject state, both ends of the loading arm touch the bottom of the frame, the floating section front side is pushed down against the resistance of the mechanism suspension spring, and the disc insertion height position is found.
   For play, the loading arm rotates and the separation of the two ends from the frame bottom releases the floating section.

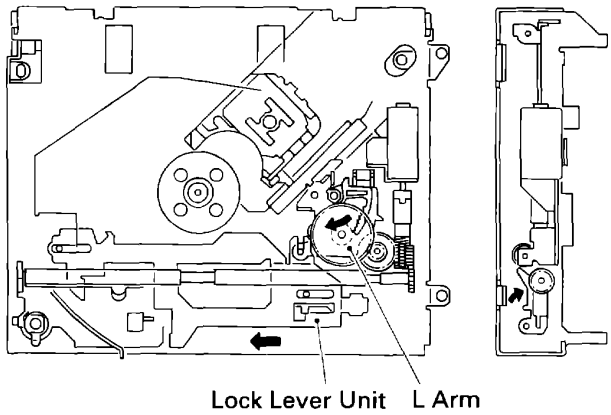

Fig.23

● Eject

1. The eject mechanism operates by reversing the rotation which takes place when the loading motor loads. The L arm moves and operates the mechanical lock, the clamp is released, the roller is applied, and the disc is conveyed. Loading stops when the photo transistor to the rear of the rubber roller (P1) is illuminated.
   However, in case of an 8cm disc, motor revolution stops a fixed period of time after P2 is illuminated. The disc type is recognized during play, by the voltage of the photo transistor (P1) located in front of the rubber rollers.

3. DISASSEMBLY AND ASSEMBLY

Remove in the order of the circled numbers in the disassembly diagram.

1. Remove the CD Mechanism Module

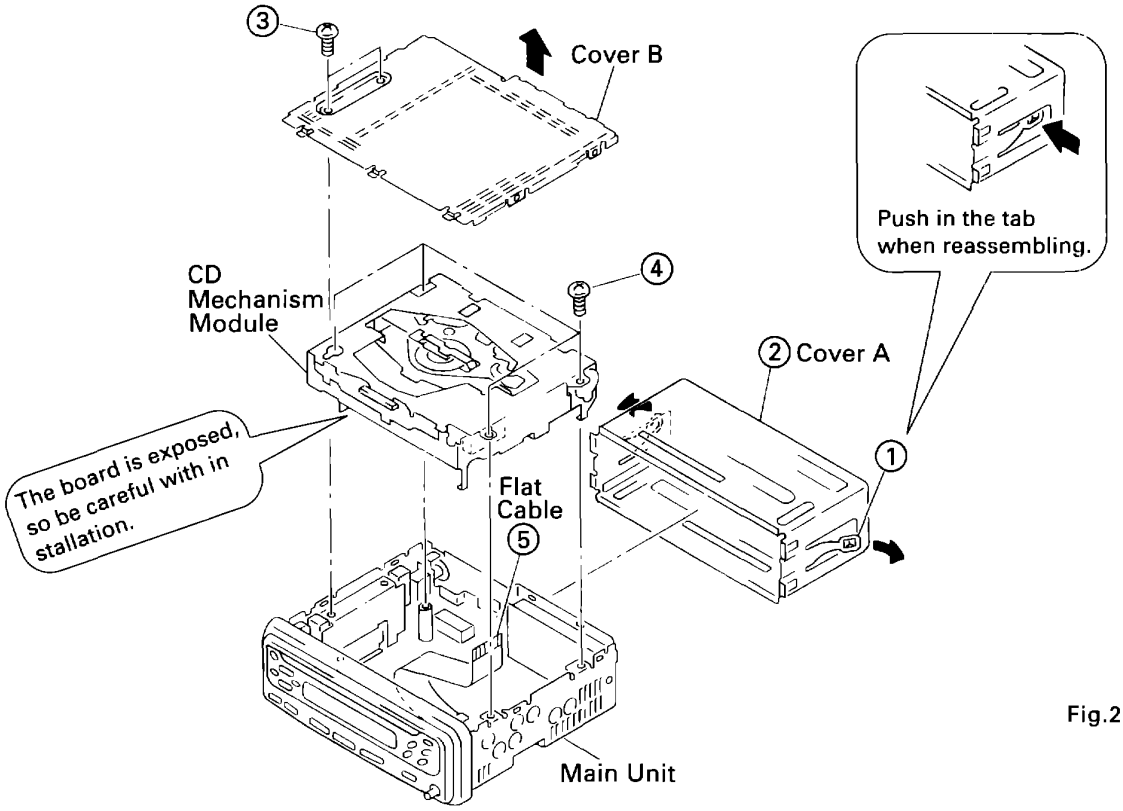

Fig.24

2. Remove the Damper and the Frame Unit

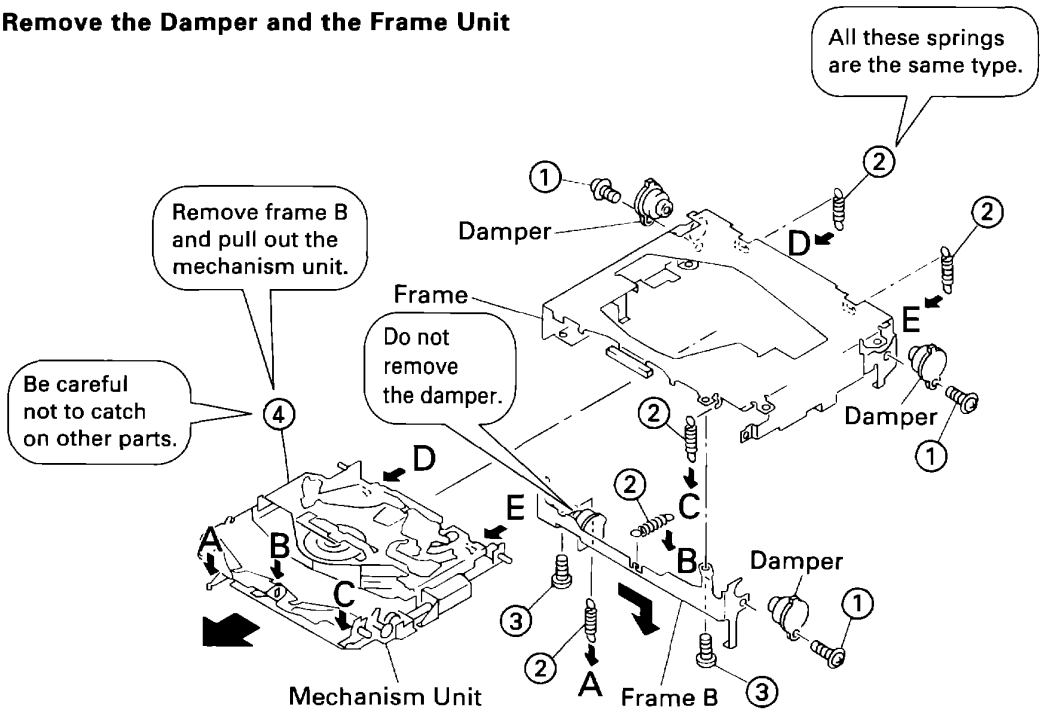

Fig.25

3. Remove the Spindle Motor

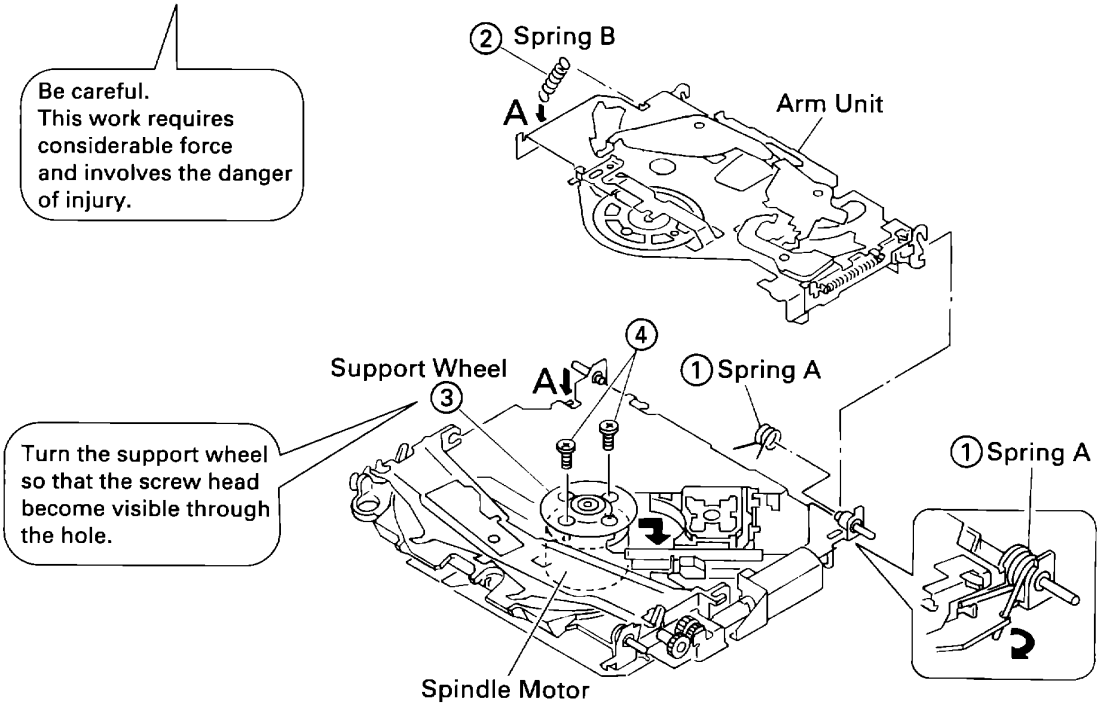

Fig.26

4. Remove the Loading Motor

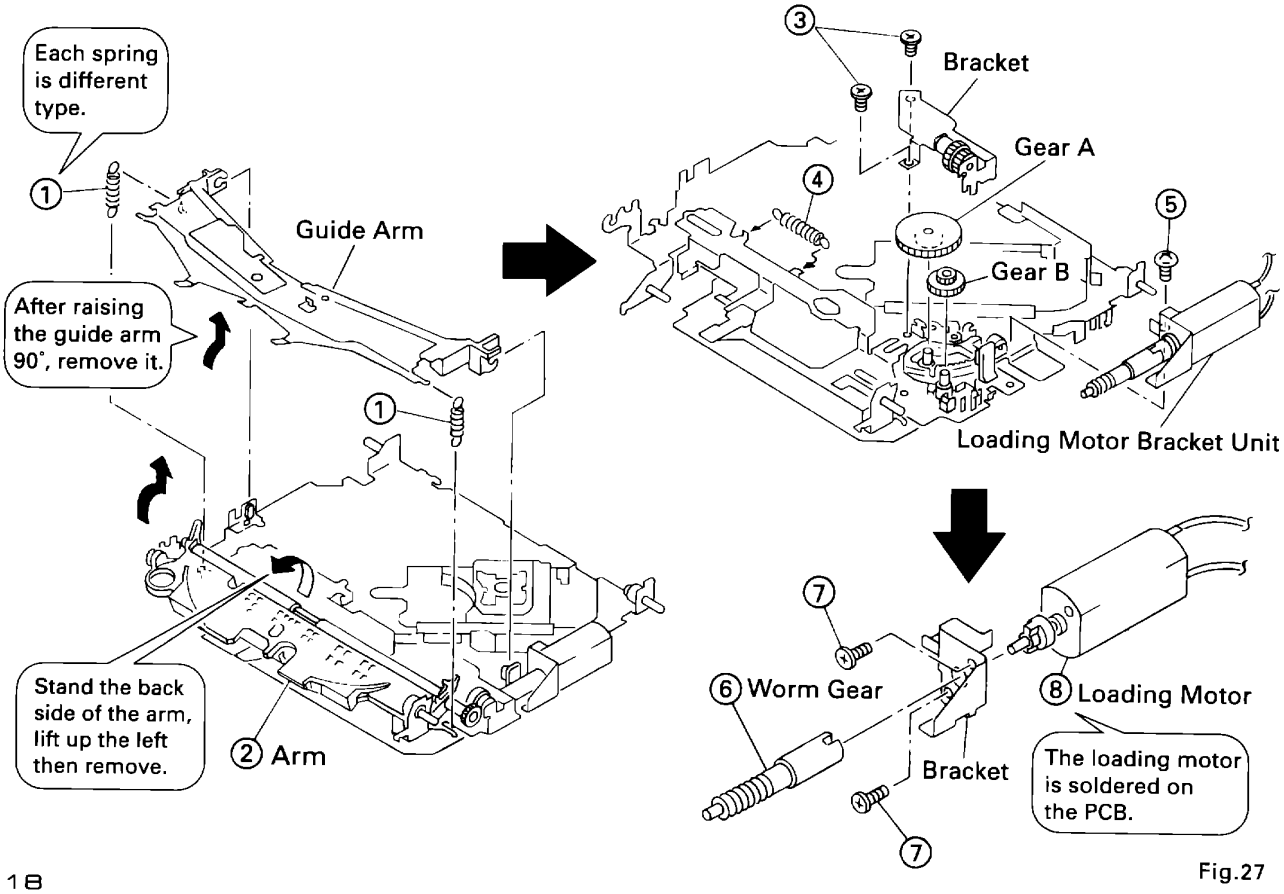

Fig.27

5. Remove the PU Unit and the Carriage Motor

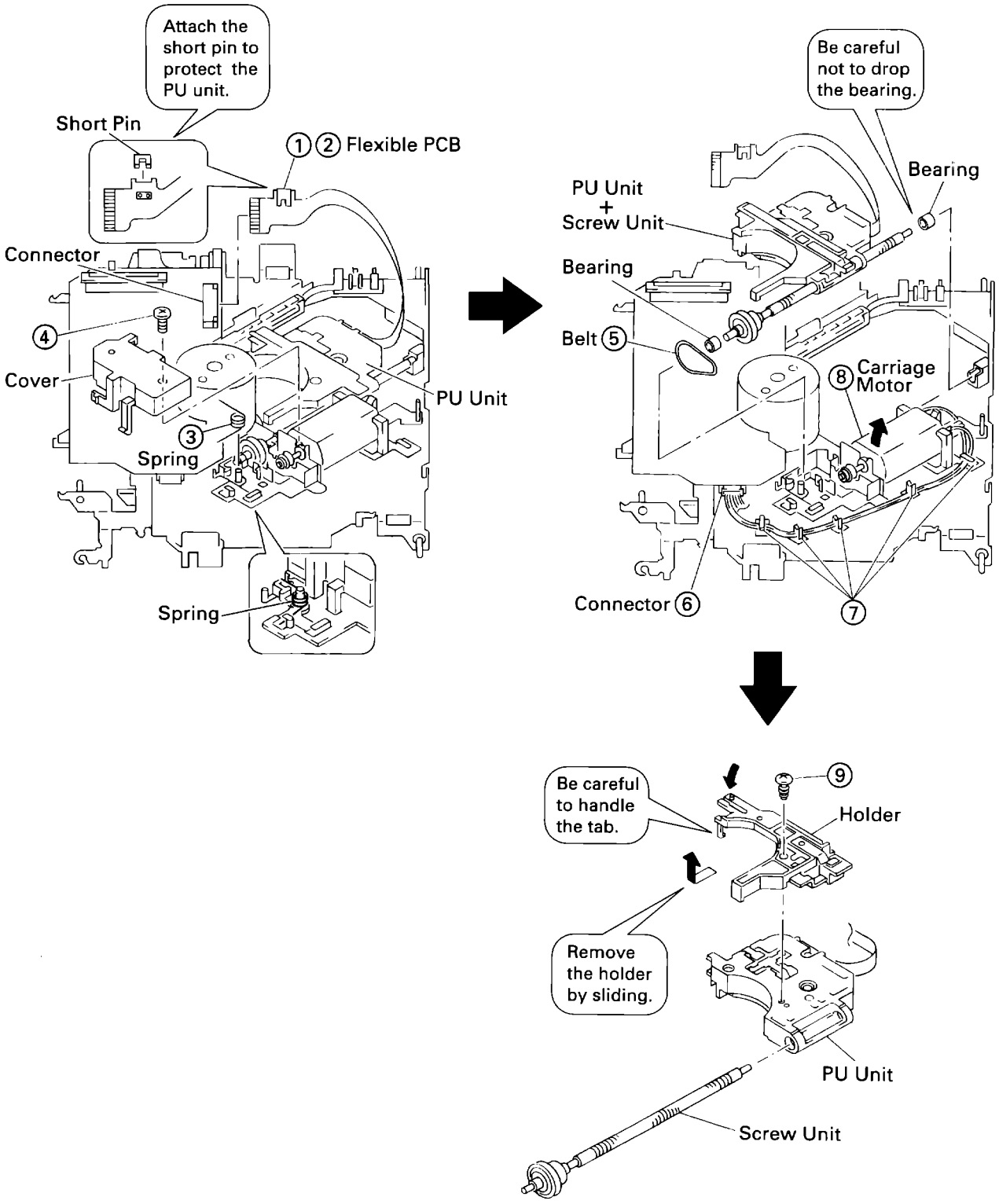

Fig.28